THIS DRAWING IS UNPUBLISHED. RELEASED FOR PUBLICATION -,- .
© COPYRIGHT - By - ALL RIGHTS RESERVED.

LOC	DIST
J	—

REVISIONS 変更

P	LTR	DESCRIPTION	DATE	DWN	APVD
	A1	REVISED PER ECO-11-005140	28MAR11	RK	HMR

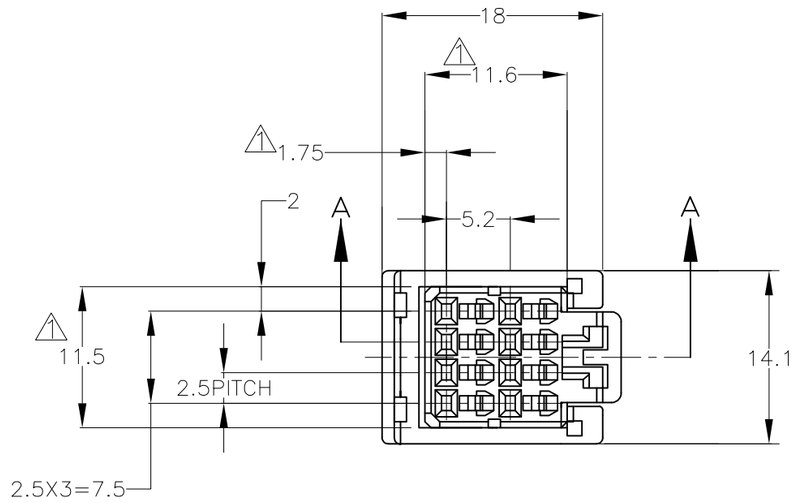

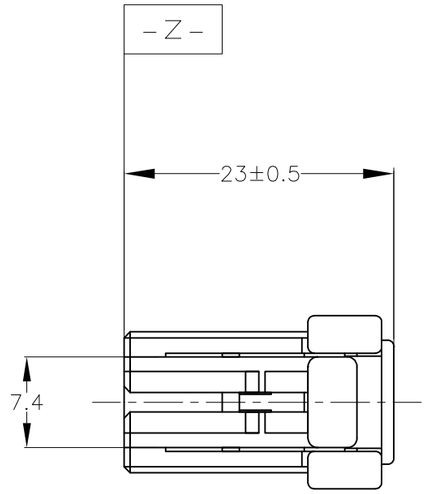

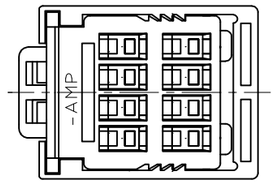

5

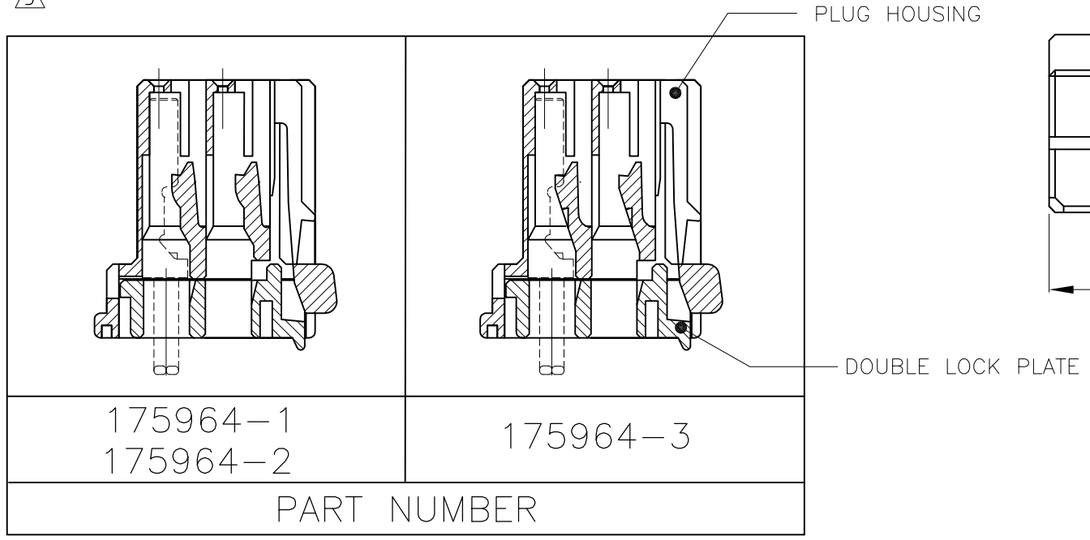

A - A

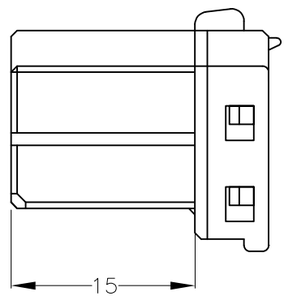

1. MUST BE KEPT BETWEEN -Z- AND 2mm
2. THE MATING CAP HSG. PART NUMBER; 175973
3. APPLED CONTACT PART NUMBER; 173681
4. APPLICABLE PRODUCT SPEC NO; 108-5281
5. THIS PLUG HOUSING HAVE TWO KINDS OF LANCE TYPE.

1. -Z- 面より2mmの範囲で測定。
2. 嵌合相手ハウジング型番：175973
3. 内装するリセプタクルコンタクト型番：173681
4. 適用製品規格番号：108-5281
5. 本プラグハウジングは、2タイプのランス形状がある。

COLOR	PART NUMBER
BLACK	175964-3
BLACK	175964-2
GRAY	175964-1

THIS DRAWING IS A CONTROLLED DOCUMENT.

TOLERANCE UNLESS OTHERWISE SPECIFIED: 一般公差

0 < x ≦ 10	:	±0.2
10 < x ≦ 30	:	±0.25
30 < x ≦ 100	:	±0.3
ANGLE 角度	;	±3°

DIMENSIONS: 単位：耗 mm

TOLERANCES UNLESS OTHERWISE SPECIFIED: 一般公差

0 PLC	± -
1 PLC	± -
2 PLC	± -
3 PLC	± -
4 PLC	± -
ANGLES	± -

MATERIAL 材料: PBT

FINISH 仕上: COLOR
HOUSING; SEE TABLE
PLATE; NATURAL

DWN	A.YAMAGUCHI	23JUN04
CHK	K.BETSUI	23JUN04
APVD	K.BETSUI	23JUN04
PRODUCT SPEC 製品規格	108-5281	
APPLICATION SPEC 取付適用規格		
WEIGHT	2.5 g	

TE Connectivity

NAME 名称: 040 SERIES MULTILOCK I/O CONNECTOR MK-II 8POSITION PLUG HOUSING ASSEMBLY

SIZE	CAGE CODE	DRAWING NO 番号	RESTRICTED TO
A3	00779	C-175964	—

CUSTOMER DRAWING

SCALE 尺度	SHEET	REV
2:1	1 OF 1	A1

1470-19 (3/11)