THIS DRAWING IS UNPUBLISHED. RELEASED FOR PUBLICATION 20
© COPYRIGHT 20 BY TYCO ELECTRONICS CORPORATION, ALL RIGHTS RESERVED.

LOC	DIST
CG	00

REVISIONS

P	LTR	DESCRIPTION	DATE	DWN	APVD
	A	RELEASED PER RTS 359806.1	04AUG2010	WS	RP

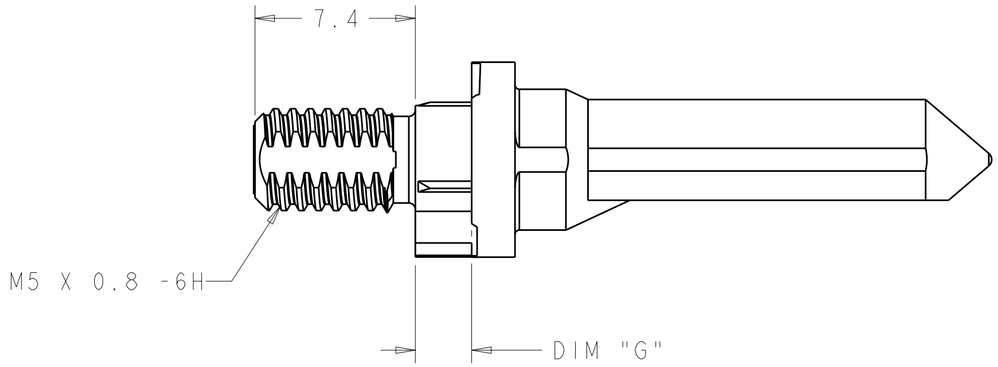

1. MATERIAL: ZINC ALLOY
2. KEY HOLE ORIENTATION (DIM A) PER MATING GUIDE MODULE PART NUMBER TABLE (ORIENTATION SHOWN ON PCB LAYOUT IS FOR 1410338-2)
3. ANNULAR RING PLATED AROUND GUIDE PIN MOUNTING HOLE ON TOP AND BOTTOM SIDE OF BOARD
4. FINISH: 3.0µm MINIMUM NICKEL OVER COPPER

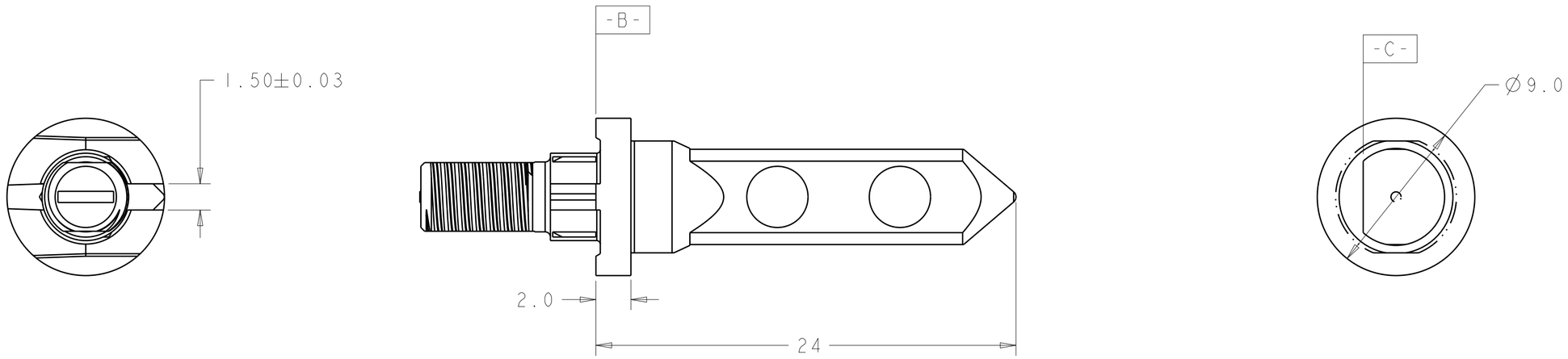

4	5.70	1410337-3
4	4.20	1410337-2
4	2.60	1410337-1
FINISH	DIM "G"	PART NUMBER

THIS DRAWING IS A CONTROLLED DOCUMENT FOR TYCO ELECTRONICS CORPORATION. IT IS SUBJECT TO CHANGE AND THE CONTROLLING ENGINEERING ORGANIZATION SHOULD BE CONTACTED FOR THE LATEST REVISION.

DIMENSIONS: mm

TOLERANCES UNLESS OTHERWISE SPECIFIED:
0 PLC ±-
1 PLC ±0.5
2 PLC ±.13
3 PLC ±0.013
4 PLC ±-
ANGLES ±-

MATERIAL 1 -
FINISH 4 -

DWN W SOURBEER 04AUG2010
CHK R.PATTERSON 04AUG2010
APVD -
PRODUCT SPEC 108-2072
APPLICATION SPEC 114-13056
WEIGHT -

Tyco Electronics
Tyco Electronics
Harrisburg, PA 17105-3608

NAME KEYED GUIDE PIN, DIE CAST BACKPLANE CONNECTOR, MULTIGIG, THREADED POST

SIZE	CAGE CODE	DRAWING NO	RESTRICTED TO
A2	00779	C-1410337	-

CUSTOMER DRAWING
SCALE 5:1 SHEET 1 OF 2 REV A

AMP 1471-9 REV 31MAR2000

Pro/ENGINEER DRAWING

THIS DRAWING IS UNPUBLISHED. RELEASED FOR PUBLICATION 20
© COPYRIGHT 20 BY TYCO ELECTRONICS CORPORATION, ALL RIGHTS RESERVED.

LOC	DIST
CG	00

REVISIONS

P	LTR	DESCRIPTION	DATE	DWN	APVD
	-	SEE SHEET 1	-	-	-

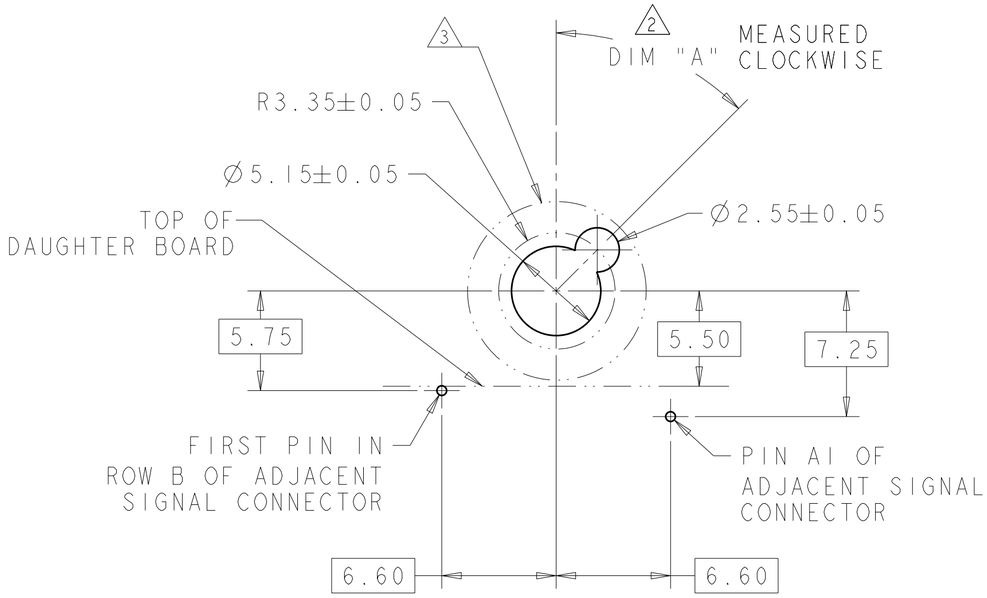

TIER 1
GUIDE PIN FOOTPRINT
(20.3 & 25.4mm SIGNAL MODULES)
SCALE 4:1

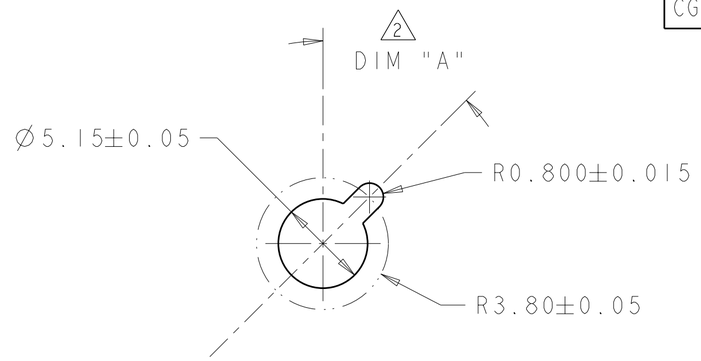

ALTERNATE PCB LAYOUT
FOR GUIDE POST
SCALE 4:1

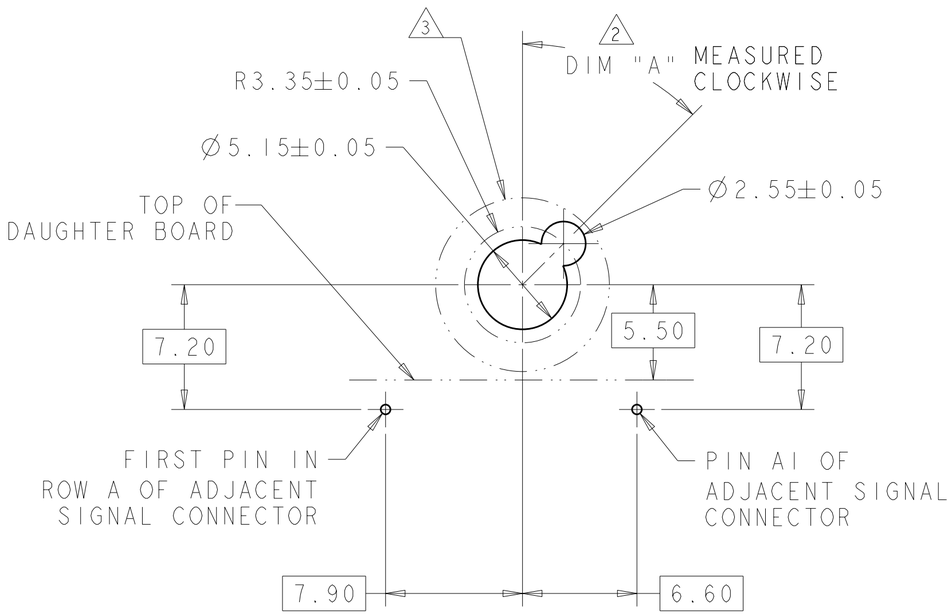

TIER 2
GUIDE PIN FOOTPRINT
(20.3mm SIGNAL MODULES)
SCALE 4:1

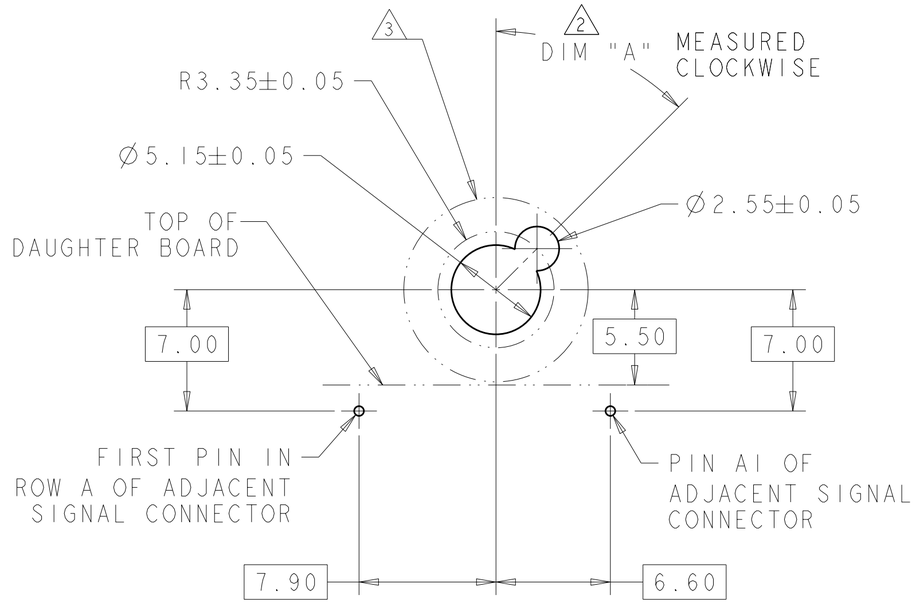

TIER 2
GUIDE PIN FOOTPRINT
(25.4mm SIGNAL MODULES)
SCALE 4:1

NICKEL	-	1410338-6
NICKEL	315°	1410338-5
NICKEL	270°	1410338-4
NICKEL	90°	1410338-3
NICKEL	45°	1410338-2
NICKEL	0°	1410338-1
FINISH	DIM "A"	20.3mm GUIDE MODULE

MATING GUIDE MODULE 2

THIS DRAWING IS A CONTROLLED DOCUMENT FOR TYCO ELECTRONICS CORPORATION. IT IS SUBJECT TO CHANGE AND THE CONTROLLING ENGINEERING ORGANIZATION SHOULD BE CONTACTED FOR THE LATEST REVISION.

DIMENSIONS: mm

TOLERANCES UNLESS OTHERWISE SPECIFIED:
0 PLC ±-
1 PLC ±0.5
2 PLC ±.13
3 PLC ±0.013
4 PLC ±-
ANGLES ±-

MATERIAL -
FINISH -

DWN 04AUG2010 W SOURBEER
CHK 04AUG2010 R. PATTERSON
APVD -
PRODUCT SPEC 108-2072
APPLICATION SPEC 114-13056
WEIGHT -

Tyco Electronics
Tyco Electronics
Harrisburg, PA 17105-3608

NAME
KEYED GUIDE PIN, DIE CAST BACKPLANE CONNECTOR, MULTIGIG, THREADED POST

SIZE	CAGE CODE	DRAWING NO	RESTRICTED TO
A2	00779	C-1410337	-

CUSTOMER DRAWING
SCALE 1:1 SHEET 2 OF 2 REV A