REV	ECN NO	REVISIONS	DRN	CKD	APP	DATE
A	——	NEW RELEASE	TWC	N.O.	MES	2-8-06
B	——	UPDATED YELLOW LED SPECIFICATIONS	SM	N.O.	MES	2-8-06
C	——	".10" WAS ".100" (2X), ".20" WAS ".200", MAX GREEN LUM. INT "710" WAS "1120", GREEN TEST COND. "IF = 10mA" WAS "IF = 20mA", ADDED METRIC DIMS, REMOVED ".115±.010", ".200" WAS ".800".	KLJ	N.O.	MES	4/4/08

PART NUMBER	LED COLOR	
	POSITION 1	POSITION 2
553-2232-802F	AlInGaP YELLOW WATER CLEAR	InGaN GREEN WATER CLEAR

ABSOLUTE MAXIMUM RATINGS AT 25°C AMBIENT	AlInGaP YELLOW	InGaN GREEN	UNITS
DERATE LINEARLY FROM 70°C YELLOW / 65°C GREEN	0.4	0.57	mA/°C
CONTINUOUS FORWARD CURRENT	30	20	mA
PEAK FORWARD CURRENT (1/10 DUTY CYCLE, 0.1 ms PULSE WIDTH)	60		mA
PEAK FORWARD CURRENT ∠ ±10ms, D=0.005		250	mA
OPERATING TEMPERATURE	-40 TO +100	-55 TO +100	°C
STORAGE TEMPERATURE	-55 TO +100		°C
POWER DISSIPATION	75	80	mW

OPERATING CHARACTERISTICS AT 25°C AMBIENT						
CHARACTERISTICS		MIN	TYP	MAX	UNITS	TEST CONDITIONS
LUMINOUS INTENSITY	GREEN	280		710	mcd	I_F = 10 mA
	YELLOW	180	320			I_F = 20 mA
FORWARD VOLTAGE	GREEN	2.7	3.0	3.7	V	I_F = 10 mA
	YELLOW		2.0	2.4		I_F = 20 mA
REVERSE CURRENT	GREEN		0.01	10	µA	V_R = 5 V
	YELLOW			100		
PEAK WAVELENGTH	GREEN		523		nm	I_F = 10 mA
	YELLOW		588			I_F = 20 mA
DOMINANT WAVELENGTH	GREEN	523	532	541	nm	I_F = 10 mA
	YELLOW	586	589	592		I_F = 20 mA
VIEWING ANGLE	GREEN		30		Degree	
	YELLOW		56			

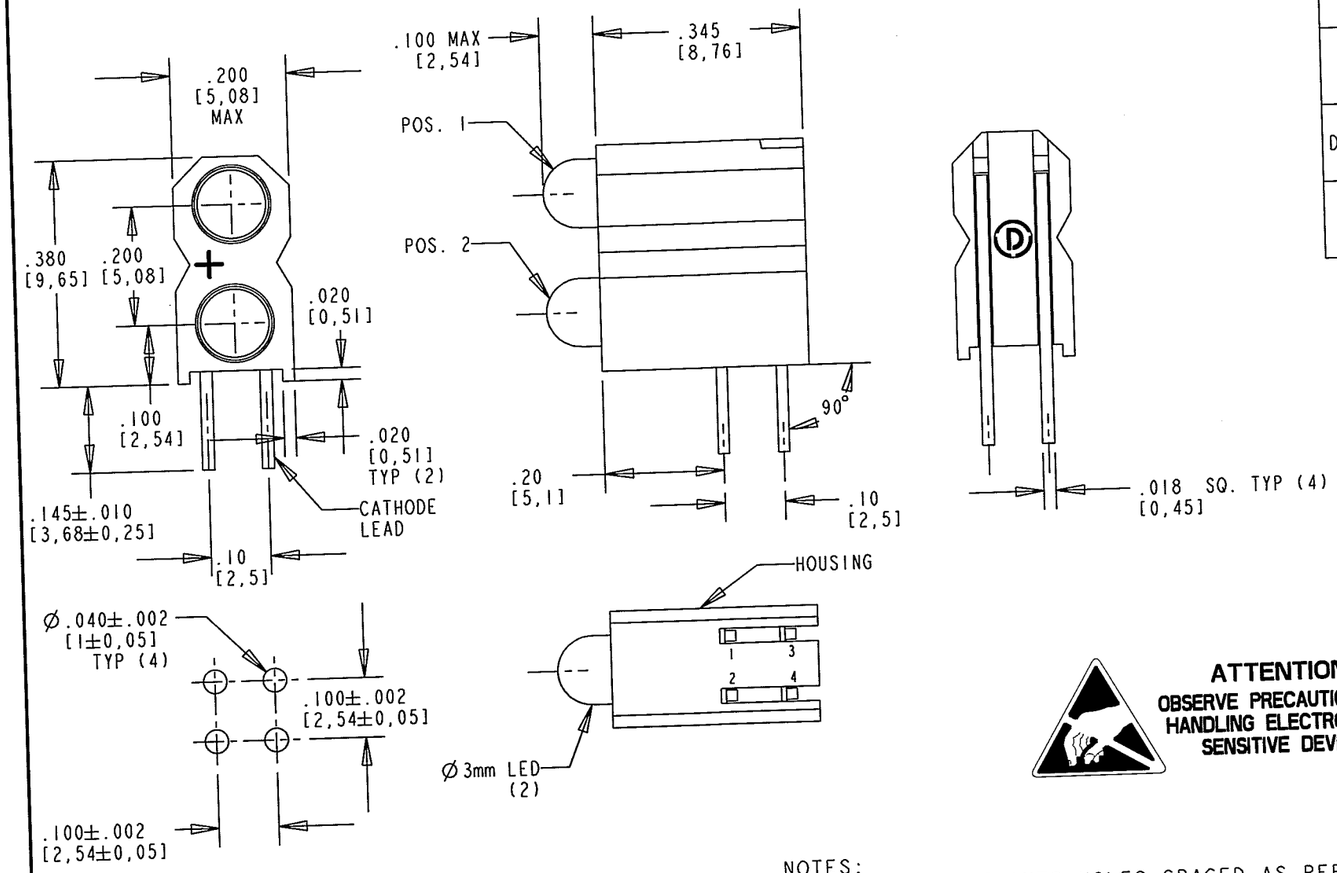

RECOMMENDED PC BOARD HOLE PATTERN

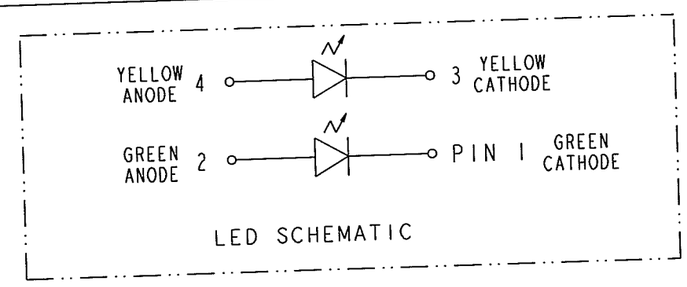

LED SCHEMATIC

ATTENTION:
OBSERVE PRECAUTIONS FOR HANDLING ELECTROSTATIC SENSITIVE DEVICES

RoHS Compliant 553-2232-802F Bi-Level Thru Hole CBI

Part Numbers with the "F" suffix ending are RoHS Compliant.
Packaging is marked with "RoHS Compliant" label or equivalent markings.
Parts can be wave soldered, dip soldered or hand soldered using typical lead-free soldering process with max 260°C temp. for 5 sec.

NOTES:
1. LEADS TO FIT INTO HOLES SPACED AS PER HOLE PATTERN.
2. LEADS TO BE FREE OF DEFORMATION AFTER BENDING AND CUTTING.
3. PIN NUMBERS FOR REFERENCE ONLY, DESIGNATION NON-EXISTANT ON PART.
4. DIALIGHT PART NUMBER 553-2232-802F
5. THIS ASSEMBLY CONTAINS ELECTROSTATIC DISCHARGE SENSITIVE DEVICES (ESDS). MAINTAIN ALL PRECAUTIONARY MEASURES DURING ASSEMBLY, HANDLING AND STORAGE IN ACCORDANCE WITH IPC-A-610.

THIS DRAWING AND THE CONTENTS HEREIN ARE CONFIDENTIAL AND THE SOLE PROPERTY OF DIALIGHT. REPRODUCTION OF THIS DRAWING OR CONSTRUCTION OF ANY PARTS WITHIN THIS DRAWING ARE FORBIDDEN WITHOUT THE WRITTEN CONSENT OF DIALIGHT.

SCALE: DRAWING SCALE
ALL DIM'S IN: INCHES (MM)
TOLERANCES: UNLESS OTHERWISE SPECIFIED
FRACTIONS: ±1/64
DECIMALS (.XX): ±.01
DECIMALS (.XXX): ±.005
DECIMALS (.XXXX): ±.0005
ANGLES: ±1°
FINISH:
FSCM 83330

DRAWING NUMBER C-17359
REV C
TITLE BI-LEVEL CBI RoHS COMPLIANT
MATERIAL

Dialight
1501 ROUTE 34 SOUTH
FARMINGDALE, NJ 07727

SHEET 1 OF 1
FAMILY TABLE: