© – TE Connectivity. All Rights Reserved.

REVISIONS					
P	LTR	DESCRIPTION	DATE	DWN	APVD
	J1	REVISED PER ECN–22–177079	29SEP2022	RK	MF

△1 .00076[.000030] GOLD IN THE CONTACT AREA, .00254[.000100]–.00508[.000200] MATTE TIN–LEAD ON THE SOLDER TAIL, ALL OVER .00127[.000050] NICKEL

△2 POINT OF MEASUREMENT FOR PLATING THICKNESS

△3 THE NOTED DIMENSIONS APPLY FROM THE BASIC DIMENSION LINE (NOT THE POST CENTERLINE) TO THE SURFACE INDICATED

△4 ON ASSEMBLIES WITH FOUR OR MORE POSITIONS, TWO POLARIZATION SLOTS. ON ASSEMBLIES WITH TWO OR THREE POSITIONS, ONE POLARIZATION SLOT.

△5 DIMENSIONS NOTED ARE FOR SOLDER STENCIL LAYOUT FOR USE WITH A 1.57±0.20 [.062±.008] THICK PRINTED CIRCUIT BOARD

△6 MATERIAL: HOUSING – HIGH TEMPERATURE LCP
COLOR: BLACK
POSTS – BRASS

△7 .00076[.000030] GOLD IN THE CONTACT AREA, .00254[.000100]–.00508[.000200] MATTE TIN ON THE SOLDER TAIL, ALL OVER .00127[.000050] NICKEL

△8 OBSOLETE PARTS: OBSOLETE CIS STREAMLINING PER D.RENAUD/D.SINISI

△9 0.25 [.010] RECESS PERMISSIBLE IN THIS AREA FOR MOLD SHUT OFF

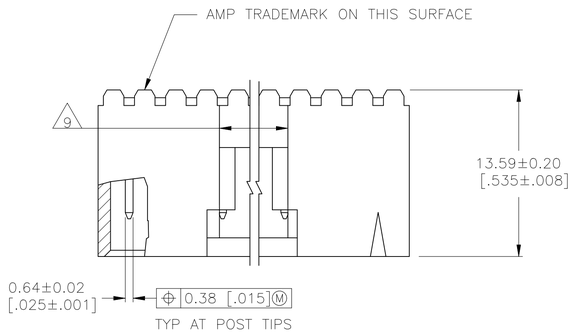

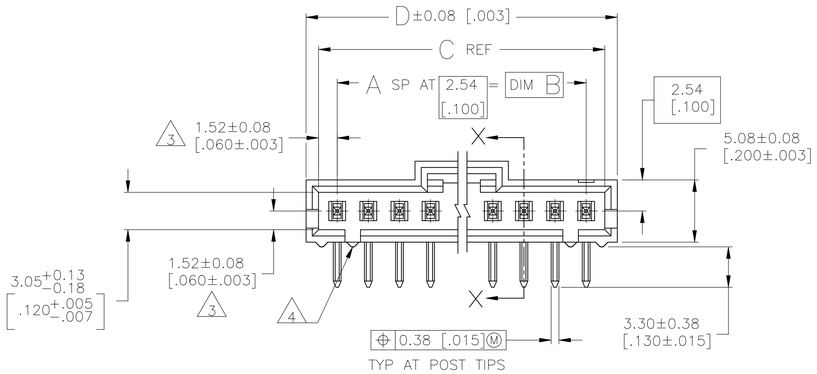

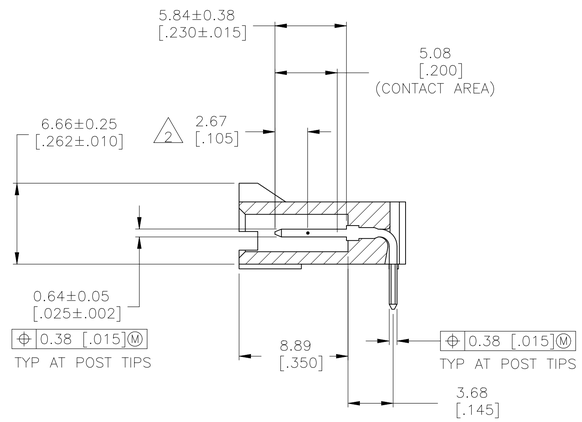

SECTION X–X

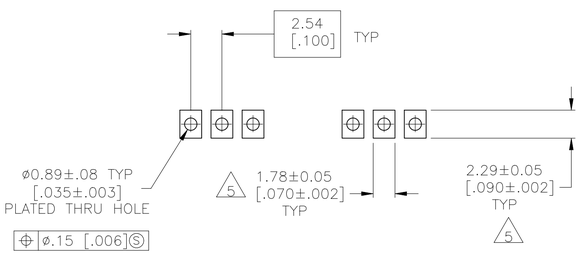

RECOMMENDED PC BOARD MOUNTING DIMENSIONS
RECOMMENDED STENCIL THICKNESS = 0.25 [.010]

PLATING	D	C	B	A	NO OF POSN	PART NUMBER
△7	2.595	2.520	2.400	24	25	7–104935–4
△7	2.495	2.420	2.300	23	24	7–104935–3
△7	2.395	2.320	2.200	22	23	7–104935–2
△7	2.295	2.220	2.100	21	22	7–104935–1
△7	2.195	2.120	2.000	20	21	7–104935–0
△7	2.095	2.020	1.900	19	20	6–104935–9
△7	1.995	1.920	1.800	18	19	6–104935–8
△7	1.895	1.820	1.700	17	18	6–104935–7
△7	1.795	1.720	1.600	16	17	6–104935–6
△7	1.695	1.620	1.500	15	16	6–104935–5
△7	1.595	1.520	1.400	14	15	6–104935–4
△7	1.495	1.420	1.300	13	14	6–104935–3
△7	1.395	1.320	1.200	12	13	6–104935–2
△7	1.195	1.120	1.000	10	11	6–104935–1
△7	1.095	1.020	.900	9	10	6–104935–0
△7	.995	.920	.800	8	9	5–104935–9
△7	.795	.720	.600	6	7	5–104935–8
△7	.695	.620	.500	5	6	5–104935–7
△7	.595	.520	.400	4	5	5–104935–6
△7	7.49 [.295]	5.59 [.220]	2.54 [.100]	1	2	5–104935–5
△7	32.89 [1.295]	30.99 [1.220]	27.94 [1.100]	11	12	5–104935–4
△7	10.03 [.395]	8.13 [.320]	5.08 [.200]	2	3	5–104935–3
△7	22.73 [.895]	20.83 [.820]	17.78 [.700]	7	8	5–104935–2
△7	12.57 [.495]	10.67 [.420]	7.62 [.300]	3	4	5–104935–1
△1	7.49 [.295]	5.59 [.220]	2.54 [.100]	1	2	104935–5
△1	32.89 [1.295]	30.99 [1.220]	27.94 [1.100]	11	12	104935–4
△1	10.03 [.395]	8.13 [.320]	5.08 [.200]	2	3	104935–3
△1	22.73 [.895]	20.83 [.820]	17.78 [.700]	7	8	104935–2
△1	12.57 [.495]	10.67 [.420]	7.62 [.300]	3	4	~~104935–1~~

△8 SUPERSEDED BY 5–104935–1

THIS DRAWING IS A CONTROLLED DOCUMENT.

DIMENSIONS: mm [INCHES]

TOLERANCES UNLESS OTHERWISE SPECIFIED:
0 PLC ± –
1 PLC ± –
2 PLC ± –
3 PLC ± .005
4 PLC ± –
ANGLES ± –

MATERIAL △6

FINISH POST : SEE TABLE

DWN E. BRANDBERG 27–JUL–95
CHK J. GESFORD 27–JUL–95
APVD D. DUPLER 27–JUL–95
PRODUCT SPEC —
APPLICATION SPEC —
WEIGHT —

TE Connectivity

NAME HEADER ASSY, AMPMODU MTE, RIGHT ANGLE, SINGLE ROW, .100CL, .025 SQ POSTS, WITH LATCH

SIZE A1 | CAGE CODE 00779 | DRAWING NO C–104935 | RESTRICTED TO —

CUSTOMER DRAWING | SCALE 4:1 | SHEET 1 OF 1 | REV J1

4805 (1/15)