© – TE Connectivity. All Rights Reserved.

REVISIONS					
P	LTR	DESCRIPTION	DATE	DWN	APVD
	A	REVISED	27AUG2020	J.J	W.H

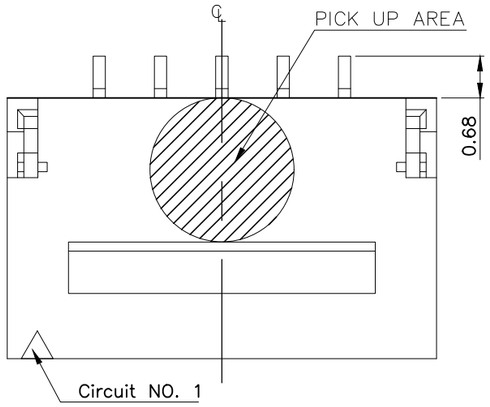

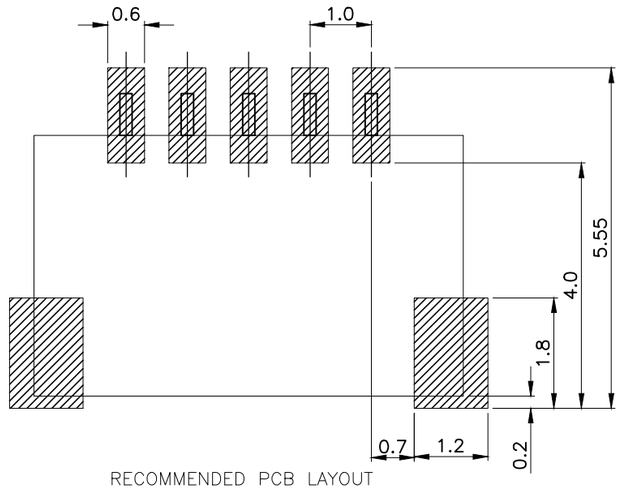

RECOMMENDED PCB LAYOUT
GENERAL TOLERANCE ±0.05

NOTES:
1. MATERIAL:
  1.1 HOUSING: HALOGEN FREE PLASTIC, HIGH TEMP, BLACK ,UL94V-0.
  1.2 CONTACT: COPPER ALLOY
  1.3 FITTING NAIL: COPPER ALLOY
2. FINISH:
  2.1 TERMINAL:
    TYPE A: 50u" MIN. NICKEL UNDERPLATING OVERALL.
            50u" MIN. MATT TIN PLATING ON CONTACT AREA AND SOLDER AREA.
    TYPE B: 50u" MIN. NICKEL UNDERPLATING OVERALL.
            GOLD FLASH PLATING ON CONTACT AREA.
            GOLD FLASH PLATING ON SOLDER AREA.
    TYPE C: 50u"MIN. NICKEL UNDERPLATING OVERALL.
            30u"GOLD PLATING ON CONTACT AREA.
            GOLD FLASH PLATING ON SOLDER AREA
  2.2 FITTING NAIL: 50u" MIN. NICKEL UNDERPLATING OVERALL.
    1:GOLD FLASH PLATING ON SOLDER AREA.
3. REFLOW SOLDER CAPABLE TO 260°C PER ACES SPEC.
4. PACKAGE STYLE: TAPE AND REEL.

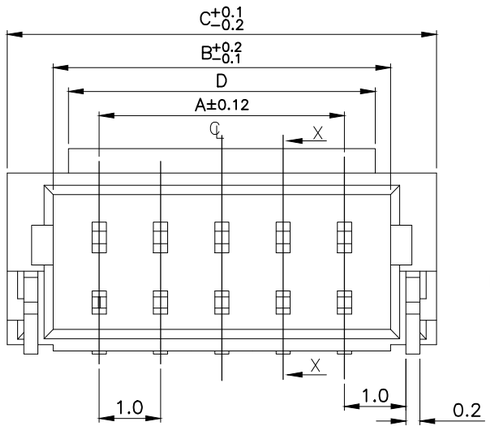

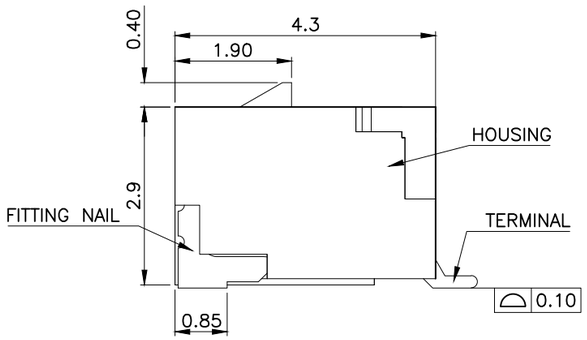

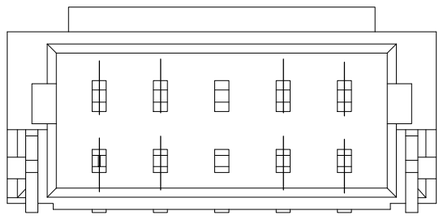

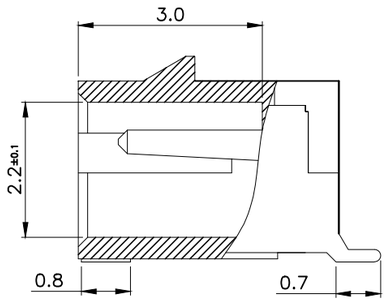

SECTION X-X

DIM.D	DIM.C	DIM,B	DIM.A	POS.NO.	TYPE C	TYPE B	TYPE A
					PLATING SPEC.		
					P/N		
15.0	17.0	15.4	14.0	15	5-2367196-5	3-2367196-5	1-2367196-5
14.0	16.0	14.4	13.0	14	5-2367196-4	3-2367196-4	1-2367196-4
13.0	15.0	13.4	12.0	13	5-2367196-3	3-2367196-3	1-2367196-3
12.0	14.0	12.4	11.0	12	5-2367196-2	3-2367196-2	1-2367196-2
11.0	13.0	11.4	10.0	11	5-2367196-1	3-2367196-1	1-2367196-1
10.0	12.0	10.4	9.0	10	5-2367196-0	3-2367196-0	1-2367196-0
9.0	11.0	9.4	8.0	9	4-2367196-9	2-2367196-9	2367196-9
8.0	10.0	8.4	7.0	8	4-2367196-8	2-2367196-8	2367196-8
7.0	9.0	7.4	6.0	7	4-2367196-7	2-2367196-7	2367196-7
6.0	8.0	6.4	5.0	6	4-2367196-6	2-2367196-6	2367196-6
5.0	7.0	5.4	4.0	5	4-2367196-5	2-2367196-5	2367196-5
4.0	6.0	4.4	3.0	4	4-2367196-4	2-2367196-4	2367196-4
3.0	5.0	3.4	2.0	3	4-2367196-3	2-2367196-3	2367196-3

THIS DRAWING IS A CONTROLLED DOCUMENT.

DIMENSIONS: mm

TOLERANCES UNLESS OTHERWISE SPECIFIED:

0 PLC	± 0.5
1 PLC	± 0.35
2 PLC	± 0.25
3 PLC	± 0.15
4 PLC	± –
ANGLES	± 2°

MATERIAL: SEE NOTE

FINISH: –

DWN Tommy Qian 18DEC2019
CHK Wenke He –
APVD Wenke He –
PRODUCT SPEC 108-115169
APPLICATION SPEC 114-115031
WEIGHT

TE Connectivity

NAME: 1.0P WTB BOARD SIDE R/A TYPE WITH LATCH –

SIZE	CAGE CODE	DRAWING NO	RESTRICTED TO
A3	00779	C-2367196	—

CUSTOMER DRAWING | SCALE N/A | SHEET 1 OF 2 | REV A

© – TE Connectivity. All Rights Reserved.

REVISIONS					
P	LTR	DESCRIPTION	DATE	DWN	APVD
	–	SEE SHEET 1	–	–	–

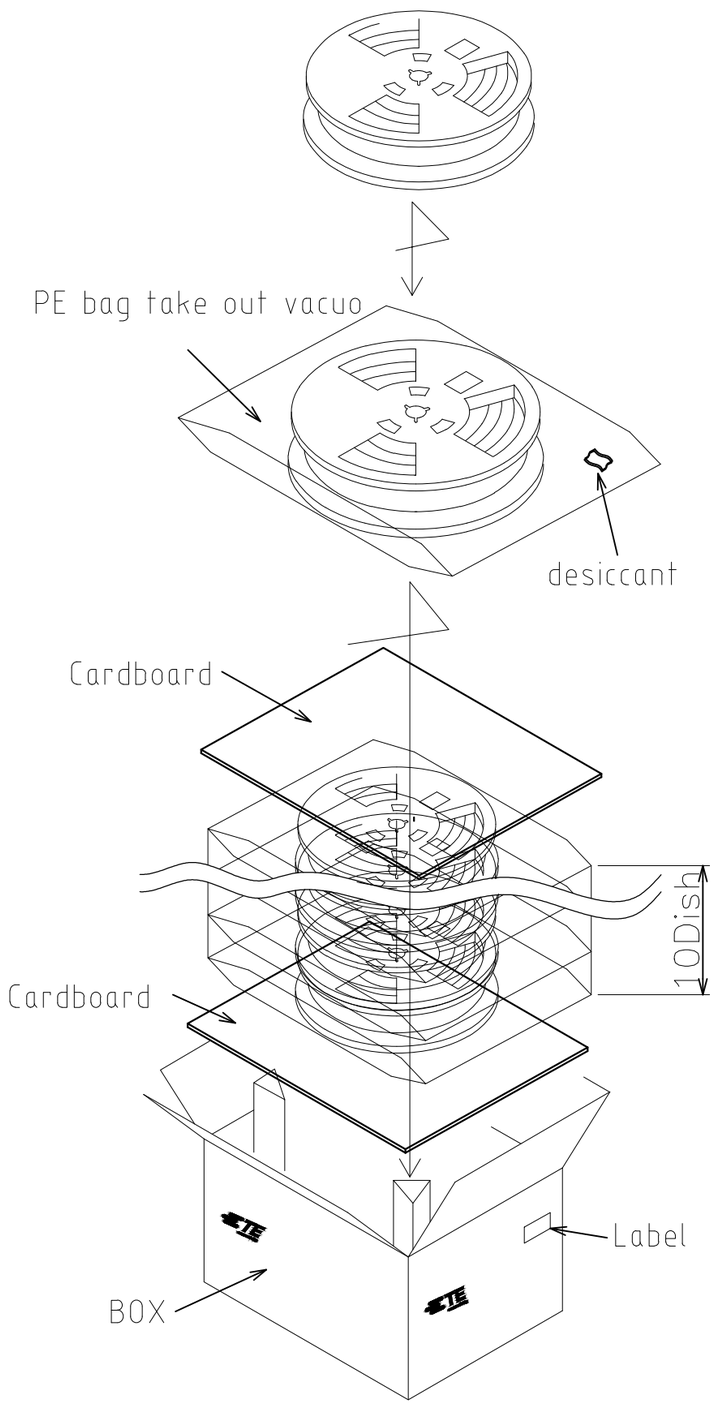

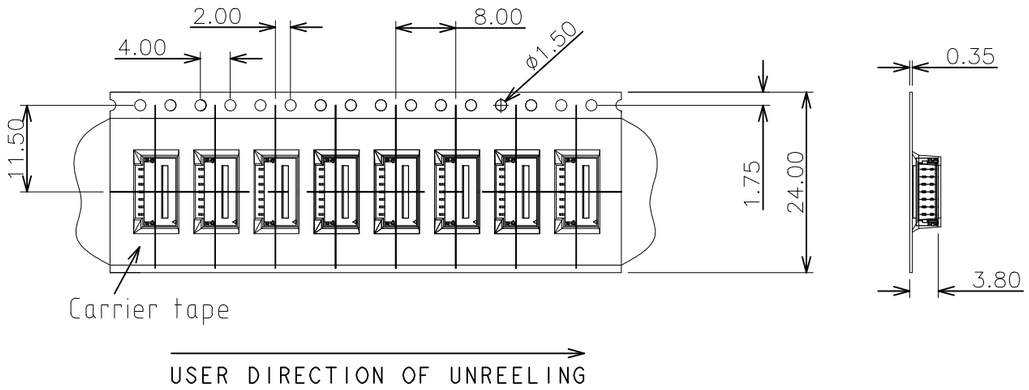

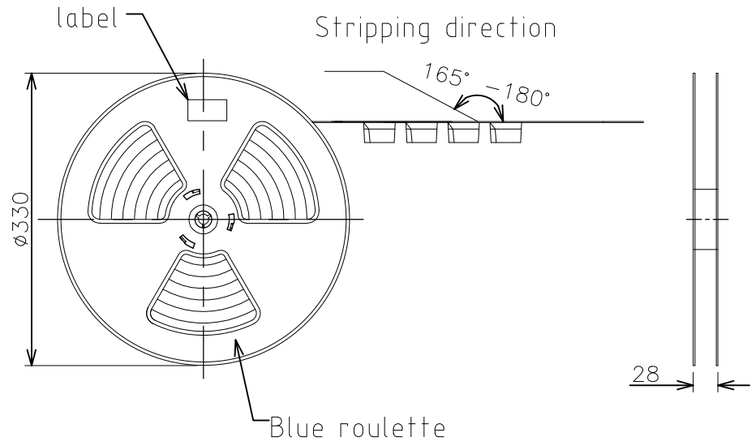

Note:
PACKAGE FOR ×-2367196-×
Quantity: 2100pcs/reel
21000pcs/box.

THIS DRAWING IS A CONTROLLED DOCUMENT.

DIMENSIONS: mm

TOLERANCES UNLESS OTHERWISE SPECIFIED:
0 PLC ± 0.5
1 PLC ± 0.35
2 PLC ± 0.25
3 PLC ± 0.15
4 PLC ± –
ANGLES ± 2°

MATERIAL: SEE NOTE

FINISH: –

DWN Tommy Qian 18DEC2019
CHK Wenke He –
APVD Wenke He –
PRODUCT SPEC 108–115169
APPLICATION SPEC 114–115031
WEIGHT

TE Connectivity

NAME: 1.0P WTB BOARD SIDE R/A TYPE WITH LATCH –

SIZE	CAGE CODE	DRAWING NO	RESTRICTED TO
A3	00779	C-2367196	–

CUSTOMER DRAWING

SCALE	SHEET	REV
N/A	2 OF 2	A