THIS DRAWING IS UNPUBLISHED. RELEASED FOR PUBLICATION 20
© COPYRIGHT 20 BY TYCO ELECTRONICS CORPORATION ALL RIGHTS RESERVED.

REVISIONS

P	LTR	DESCRIPTION	DATE	DWN	APVD
	A1	ECO-14-016157	24OCT2014	DR	DR
	A2	ECO-15-004945	30MAR2015	YS	DR
	A3	ECO-19-017852	14NOV2019	SKR	YS

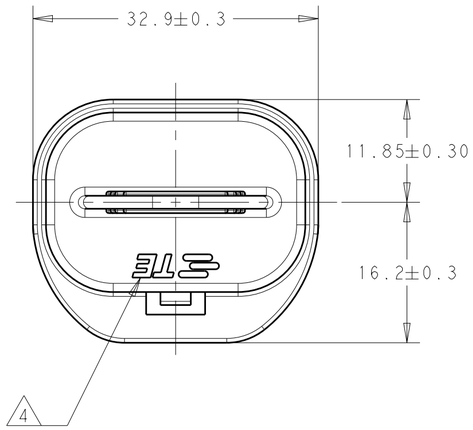

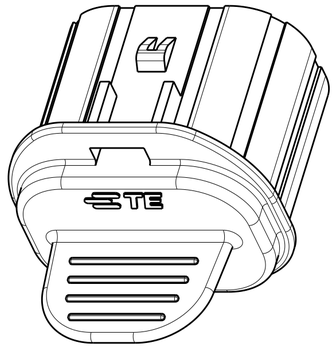

2103414-1

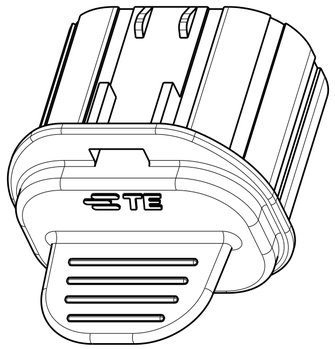

2103414-2

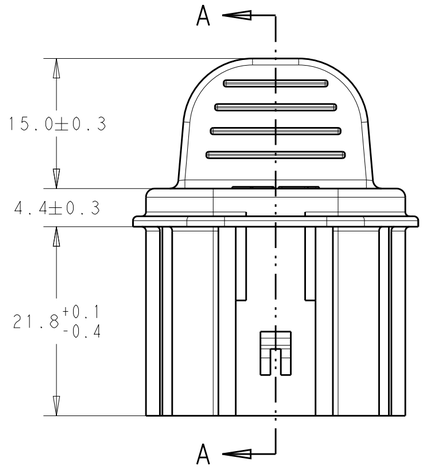

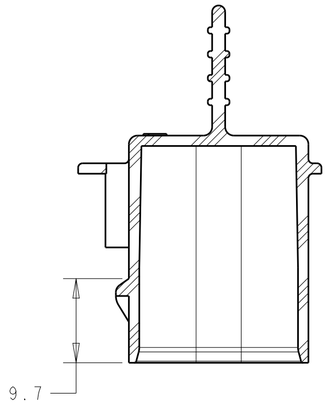

SECTION **A-A**
2103414-1

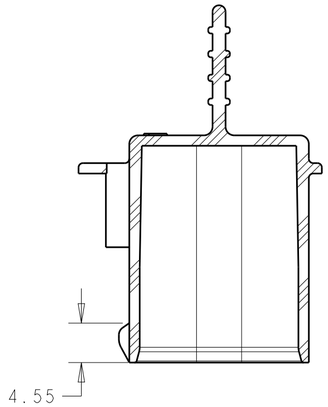

SECTION **A-A**
2103414-2

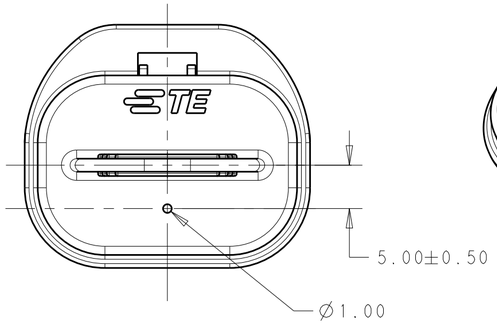

2103414-3

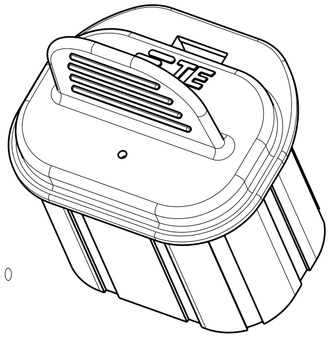

2103414-3

ALL OTHER FEATURES AND DIMENSIONS IDENTICAL TO 2103414-2

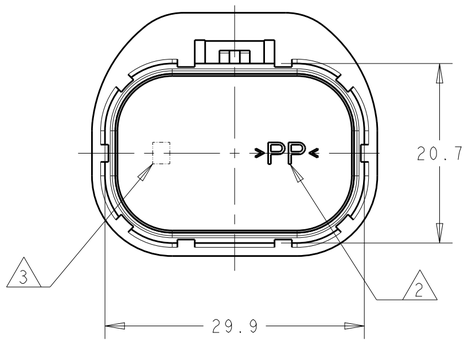

2103414-1 SHOWN

1. MATERIAL:
   TYPE: POLYPROPYLENE UNFILLED
   COLOR: SEE TABLE
2. RECYCLE CODE ">PP<"
3. MOLD CAVITY I.D.
4. TE CONNECTIVITY TRADE MARK

WEIGHT	COLOR	DESCRIPTION	REV	PART NO
3.23 g	BLACK	SHIPPING CAP TYPE 2A	A	2103414-3
3.23 g	BLACK	SHIPPING CAP TYPE 2	A	2103414-2
3.24 g	NATURAL	SHIPPING CAP TYPE 1	A	2103414-1

THIS DRAWING IS A CONTROLLED DOCUMENT.

DIMENSIONS: mm

TOLERANCES UNLESS OTHERWISE SPECIFIED:
0 PLC ±
1 PLC ±0.2
2 PLC ±0.10
3 PLC ±
4 PLC ±
ANGLES ±1°
FINISH

MATERIAL 1

DWN D. RHEIN 14NOV2012
CHK D. RHEIN 14NOV2012
APVD A. GUANCO 14NOV2012
PRODUCT SPEC
APPLICATION SPEC
WEIGHT SEE TABLE
Customer Drawing

TE Connectivity

NAME SHIPPING CAP, PLUG, HVA280

SIZE	CAGE CODE	DRAWING NO	RESTRICTED TO
A2	00779	C-2103414	-

SCALE 1:1 SHEET 1 OF 1 REV A3