REV.	ECN NO.	DATE	SIGN	DESCRIPTION
F	C210309	2021/02/25	Ruru	F X2
G	C221973	2022/12/22	Ruru	G X1
H	C231034	2023/08/09	Ruru	H X1

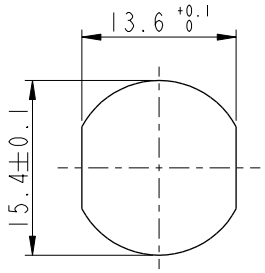

Recommended Panel Cut-Out

D
M12B-XXPMMS-SF8001

XX: No. Of Pin

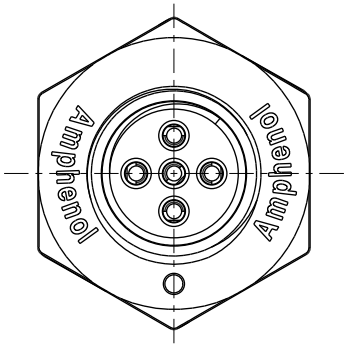

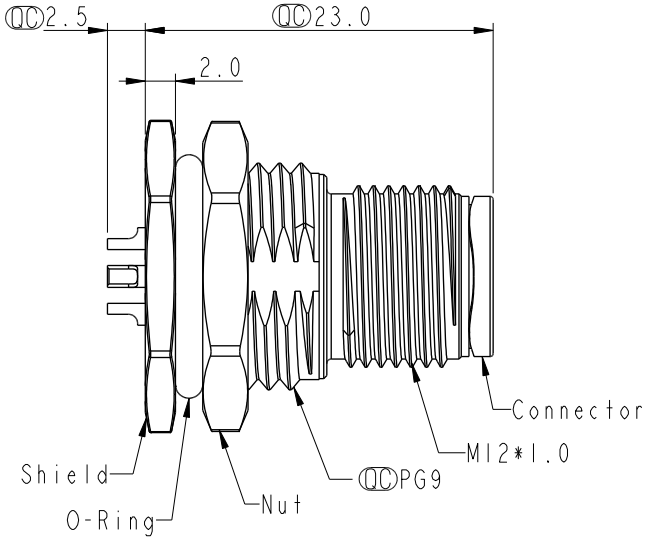

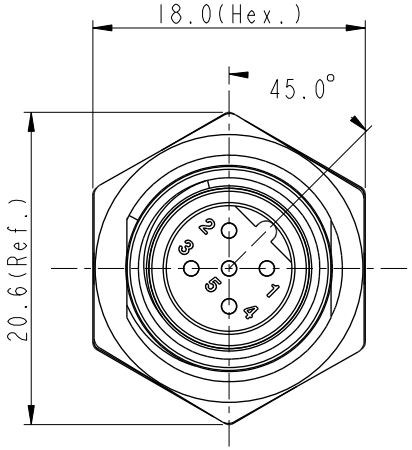

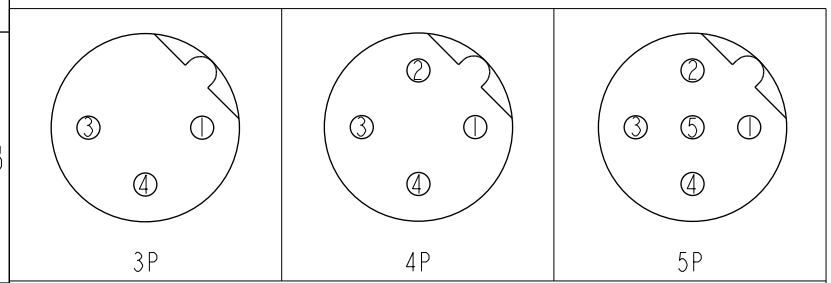

Pin Assignment Front View

C

D F Note:
- * RoHS Compliant
- * QC Important dimension
- G C * Waterproof rate: IP68, unmated 1m/24h
  - H IP69K, mated
- * Connector
  - Housing: Thermoplastic, Black
  - Pin: Copper alloy, Gold plated
- E * Shield: Metal
- E * Nut: Metal
- * O-Ring: Rubber, Black
- * For panel thickness max: 4.5mm
- * Nut is packed separately in pe bag

UNIT: mm

TOLERANCE
.X ±0.25
.XX ±0.1
.XXX ±0.05
ANGLES ±1°

TITLE: N SEN, M12 B, SCREW RECEPTACLE, M, M, SOLDER F			
SCALE 2:1	SIZE A4	SHEET 1 OF 1	
REV. H	WC-REV. A.5	QC: Inspection item	

Amphenol LTW
安費諾亮泰企業股份有限公司

ITEM NO	DRAWN BY Yulong_wang	DATE 2016-09-05
DWG NO D M12B-XXPMMS-SF8001	CHECKED BY Jinhai	DATE 2016-09-05
CUSTOMER ALTW	APPROVED BY Jerry	DATE 2016-09-05

W10814-03-RW01A2

THIS DOCUMENT IS SUBJECT TO CHANGE WITHOUT NOTICE. IT IS CONFIDENTIAL AND A PROPERTY OF Amphenol LTW. DISCLOSURE TO THIRD PARTY HAS TO BE AUTHORIZED BY Amphenol LTW.