THIS DRAWING IS UNPUBLISHED. RELEASED FOR PUBLICATION 19JUNE ,2006.
© COPYRIGHT 2006 By – ALL RIGHTS RESERVED.

LOC	DIST
GP	00

REVISIONS

P	LTR	DESCRIPTION	DATE	DWN	APVD
	G	REVISED PER ECO-15-000643	24JAN2015	AP	PR

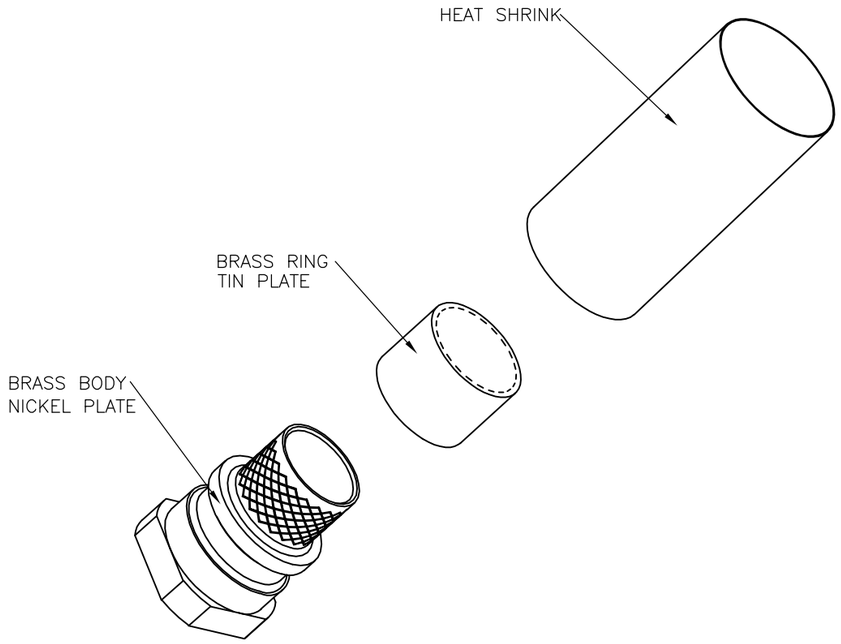

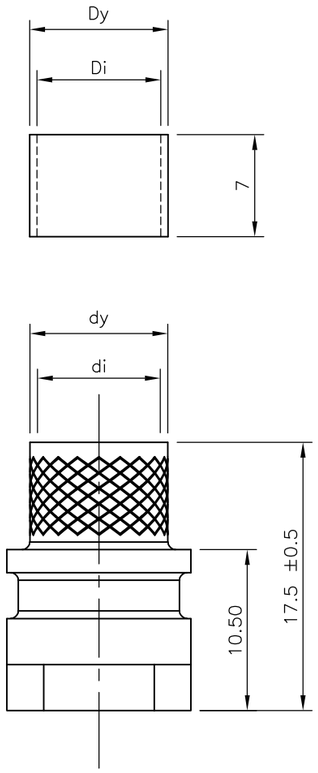

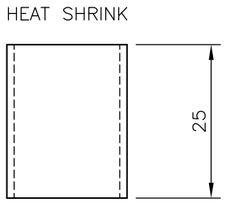

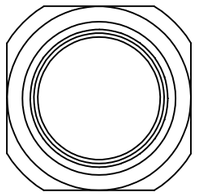

1. BULK PACKAGED CRIMP KIT ASSEMBLIES: EACH COMPONENT PACKAGED SEPARATELY IN BAGS, 100 COMPONENTS PER BAG. 1 BAG OF EACH COMPONENT IN 1 BOX WITH 1 LEAFLET PER BOX.
2. FOR APPLICATION DETAILS REFER TO LEAFLET 1478531-1.
3. INDIVIDUALLY PACKAGED CRIMP KIT ASSEMBLIES. EACH BAG CONTAINS ENOUGH COMPONENTS FOR 1 ASSEMBLY. INCLUDES 1 LEAFLET PER BOX OF 100 BAGS.

PART NUMBER	di	dy	Di	Dy	CABLE MAX DIA
1478764-4	8	9	10	11	9.5mm DIA
1478764-3	7	8	9	10	8.5mm DIA
1478764-2, 5-1478764-2	6	7	8	9	7.5mm DIA
1478764-1, 5-1478764-1	4	5	6	7	6.0mm DIA

COMPONENTS/ BAG	DESCRIPTION	PART NUMBER	
1	CRIMP KIT 7.5mm CABLE	5-1478764-2	3
1	CRIMP KIT 6mm CABLE	5-1478764-1	3
100	CRIMP KIT 9.5mm CABLE	1478764-4	1
100	CRIMP KIT 8.5mm CABLE	1478764-3	1
100	CRIMP KIT 7.5mm CABLE	1478764-2	1
100	CRIMP KIT 6mm CABLE	1478764-1	1

THIS DRAWING IS A CONTROLLED DOCUMENT.
DIMENSIONING AND TOLERANCING PER ASME Y14.5M (ISO STANDARDS)

DIMENSIONS: mm

TOLERANCES UNLESS OTHERWISE SPECIFIED:
0 PLC ± –
1 PLC ± –
2 PLC ± –
3 PLC ± –
4 PLC ± –
ANGLES ± –

MATERIAL –
FINISH –

DWN A.Morey 19JUN2006
CHK F.Wheeler-King 20JUN06
APVD F.Wheeler-King 20JUN06
PRODUCT SPEC —
APPLICATION SPEC —
WEIGHT —

TE Connectivity

NAME
–
CRIMP KIT FOR ADK SERIES AND PLATED PLASTIC BACKSHELLS

SIZE	CAGE CODE	DRAWING NO	RESTRICTED TO
A3	00779	C-1478764	—

CUSTOMER DRAWING | SCALE NTS | SHEET 1 OF 1 | REV G