REV.	ECN NO.	DATE	SIGN	DESCRIPTION
B	LEN1390042	2013-05-13	Lu Di	Update Dinmensions
C	LEN13B0257	2013/11/12	SAM	Modify Dimension.

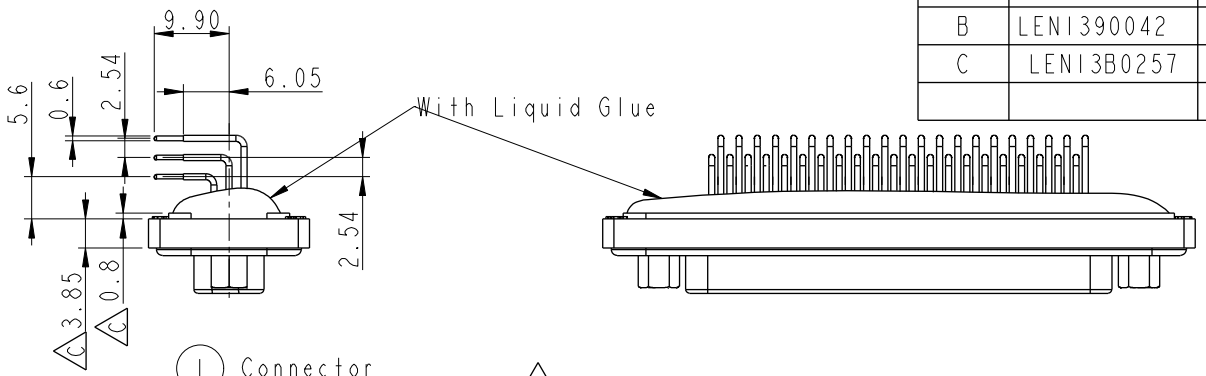

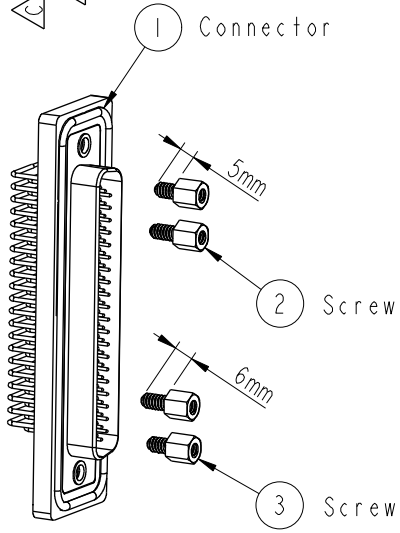

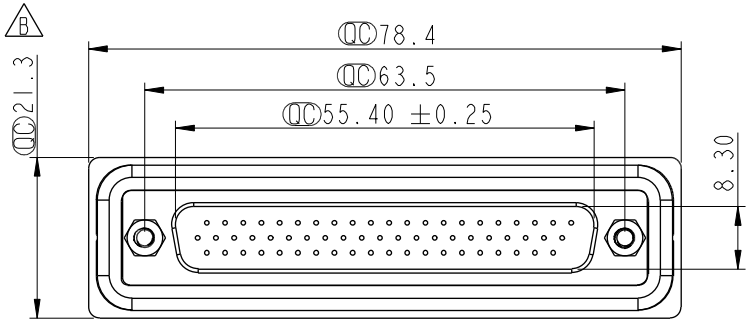

Panel Thickness
面 板 厚 度

Screw L=5.0 For Panel Thickness
Under 1.2mm
適用板厚爲 1.2mm 以下

Screw L=6.0 For Panel Thickness
Between 1.2~2.0mm
適用板厚爲1.2~2.0mm

ALTW
DCC. DEPT.
CONFIDENTIAL
2013.11.20
ISSUED

ALTW
CONFIDENTIAL
2013-11-12
R&D DEPT.

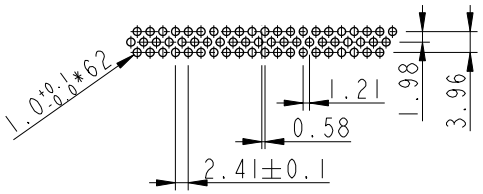

62 Pin Male Connector
PCB Pin Layout

Note:
* QC Important Dimension.
* Waterproof Rate : IP67
* Do Mating Test After Glued
  點膠後,須作對插測試
* HD-SUB Conn. : Black Core,PBT
* Plastic Jacket : Black,Nylon+GF
* Male Pin : Copper Alloy , Gold Plated
* Ring : Light Blue,Silicone
* Screw : Copper Alloy,Nickel Plated,#4-40 UNC

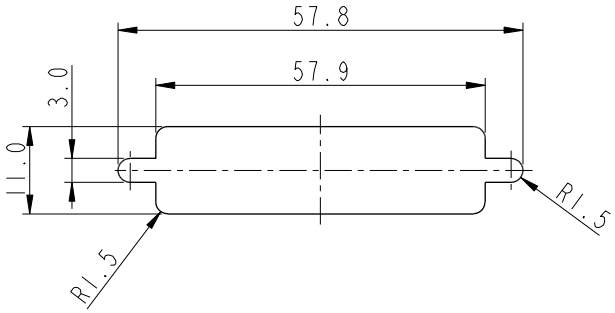

Recommended Panel Cut-Out
建 議 挖 孔 尺 寸

UNIT:mm

TOLERANCE
.X ±0.25
.XX ±0.1
.XXX ±0.05
ANGLES ±1°

TITLE: HD-Sub Conn. 62 Pins PCB Type For Panel,PCB 90°

SCALE	SIZE	SHEET
1:1	A4	1 OF 1
REV. C	WC-REV. B.1	QC:Inspection item

Amphenol LTW
安費諾亮泰企業股份有限公司

ITEM NO	DRAWN BY	DATE
HDB-62PMMP-SR7001	SamChang	2013-11-12
DWG NO: HDB-62PMMP-SR7001	CHECKED BY: Jeffrey	DATE: 2013-11-12
CUSTOMER: ALTW	APPROVED BY: Rita	DATE: 2013-11-12

THIS DOCUMENT IS SUBJECT TO CHANGE WITHOUT NOTICE. IT IS CONFIDENTIAL AND A PROPERTY OF Amphenol LTW. DISCLOSURE TO THIRD PARTY HAS TO BE AUTHORIZED BY Amphenol LTW.