THIS DRAWING IS UNPUBLISHED. RELEASED FOR PUBLICATION 20
© COPYRIGHT 20 BY TYCO ELECTRONICS CORPORATION, ALL RIGHTS RESERVED.

| LOC | DIST |
|---|---|
| AD | 00 |

REVISIONS

| P | LTR | DESCRIPTION | DATE | DWN | APVD |
|---|---|---|---|---|---|
| | 0 | RELEASED | 14FEB2006 | BC | RP |
| | A | REV PER ECO-08-000400 | 11JAN2008 | BC | RP |

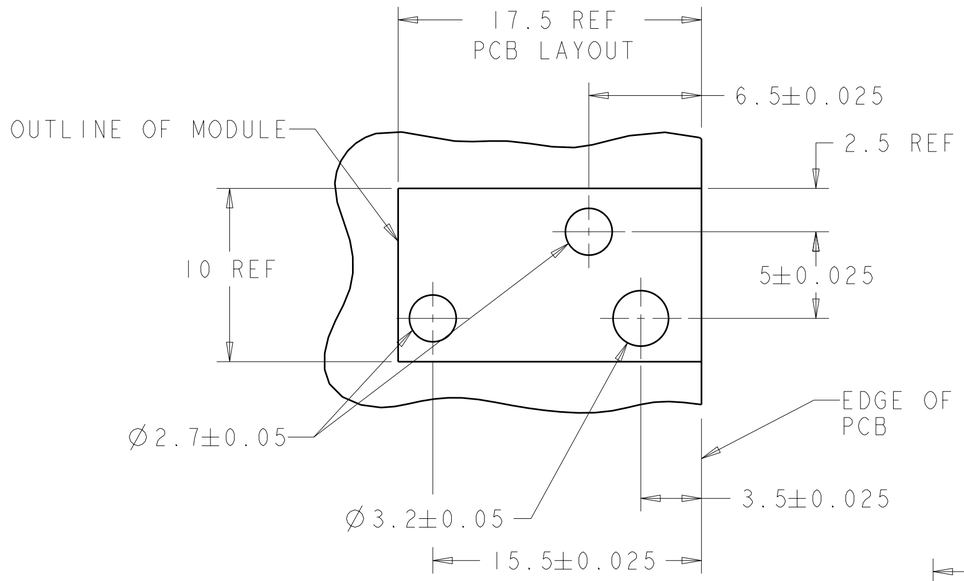


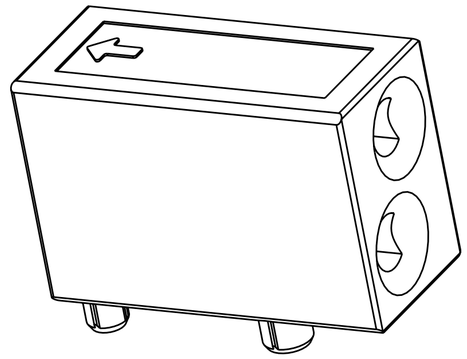

1. RECOMMENDED MOUNTING HARDWARE- M2.5 X 0.45 SCREW,
   7.0MM LONG UP TO 2.9 MM THICK PCB
   8.0MM LONG FOR 3.0 TO 4.0 MM THICK PCB,
   10.0MM FOR 4.1 TO 6.0MM THICK PCB,
   12.0MM FOR 6.1 TO 8.0MM THICK PCB.
   (HARDWARE NOT SUPPLIED WITH PART NUMBER)

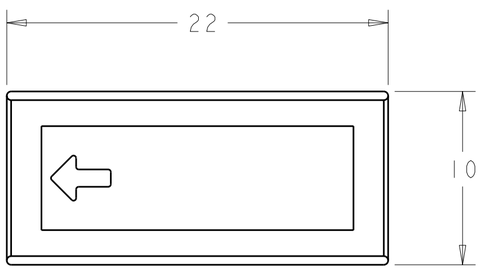


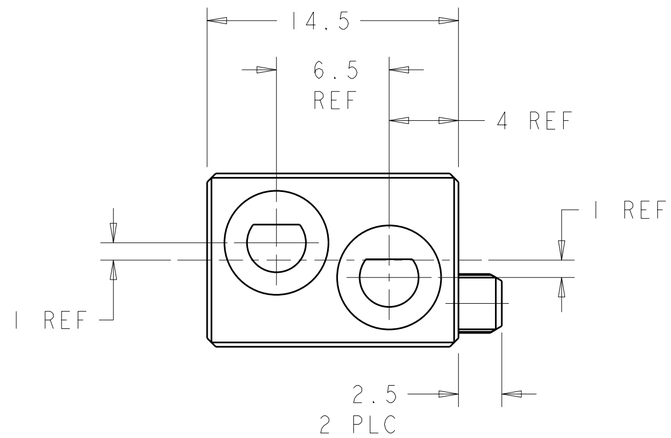


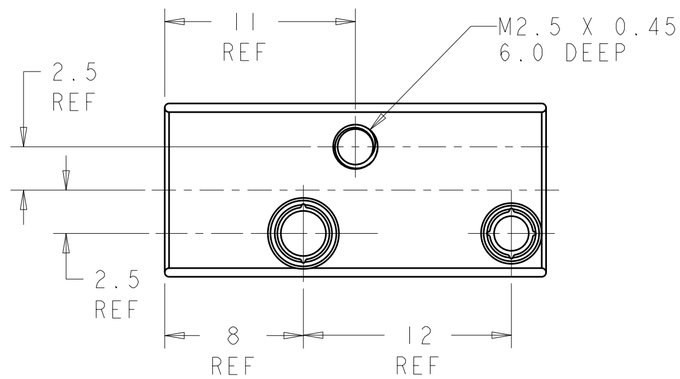


| | | | |
|---|---|---|---|
| N/A | N/A | UNKEYED | 9-1469958-9 |
| 225° | 315° | 6 8 | 6-1469958-8 |
| 180° | 180° | 5 5 | 5-1469958-5 |
| 135° | 45° | 4 2 | 4-1469958-2 |
| 90° | 270° | 3 7 | 3-1469958-7 |
| 0° | 0° | 1 1 | 1-1469958-1 |
| "A" | "B" | KEYING POS | PART NUMBER |

THIS DRAWING IS A CONTROLLED DOCUMENT FOR TYCO ELECTRONICS CORPORATION. IT IS SUBJECT TO CHANGE AND THE CONTROLLING ENGINEERING ORGANIZATION SHOULD BE CONTACTED FOR THE LATEST REVISION.

DIMENSIONS: mm

TOLERANCES UNLESS OTHERWISE SPECIFIED:

| | |
|---|---|
| 0 PLC | ±0.2 |
| 1 PLC | ±0.5 |
| 2 PLC | ±0.13 |
| 3 PLC | ±0.013 |
| 4 PLC | ±0.0001 |
| ANGLES | ±0.5 |

MATERIAL: ZAMAK 3

FINISH: NICKEL

DWN B.CARBO 14FEB2006
CHK R.PATTERSON 14FEB2006
APVD R.PATTERSON 14FEB2006

PRODUCT SPEC -
APPLICATION SPEC -
WEIGHT -

Tyco Electronics
Tyco Electronics
Harrisburg, PA 17105-3608

NAME: ATCA GUIDE MODULE (FRONT BOARD - K1/K2)

SIZE A2 | CAGE CODE 00779 | DRAWING NO C-1469958 | RESTRICTED TO -

CUSTOMER DRAWING | SCALE 2:1 | SHEET 1 OF 2 | REV A

AMP 1471-9 REV 31MAR2000

Pro/ENGINEER DRAWING

THIS DRAWING IS UNPUBLISHED. RELEASED FOR PUBLICATION 20
© COPYRIGHT 20 BY TYCO ELECTRONICS CORPORATION, ALL RIGHTS RESERVED.

| LOC | DIST |
|---|---|
| AD | 00 |

REVISIONS

| P | LTR | DESCRIPTION | DATE | DWN | APVD |
|---|---|---|---|---|---|
| | - | SEE SHEET 1 | - | - | - |

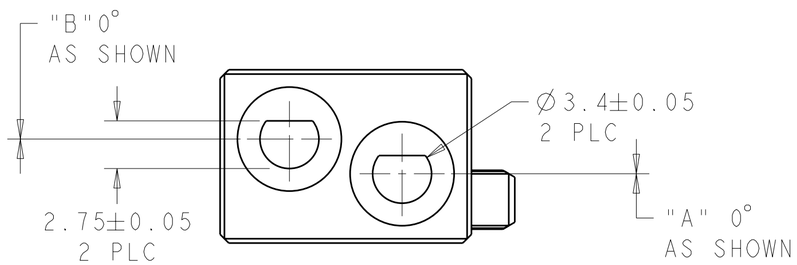


1-1469958-1

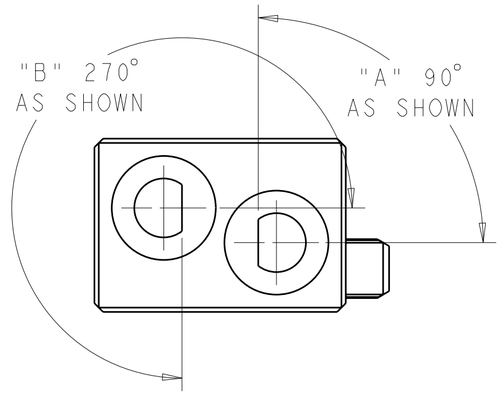


3-1469958-7

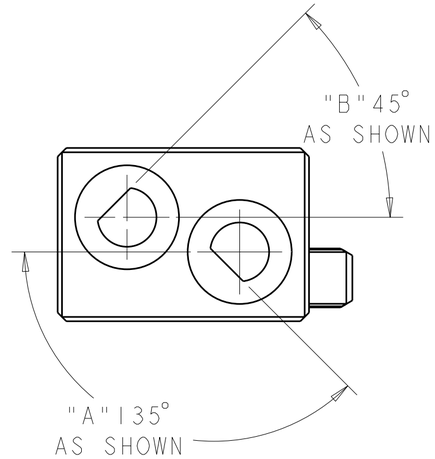


4-1469958-2

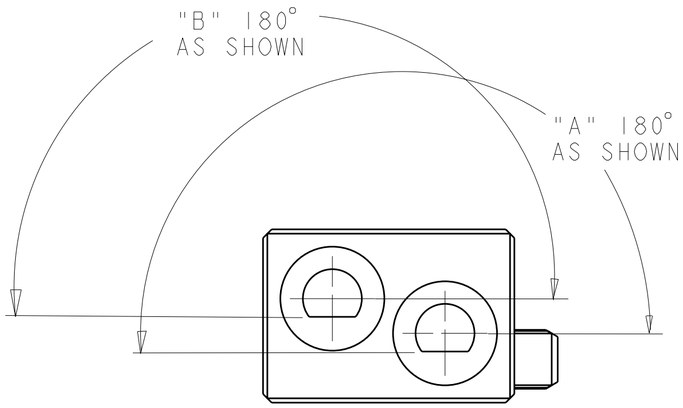


5-1469958-5

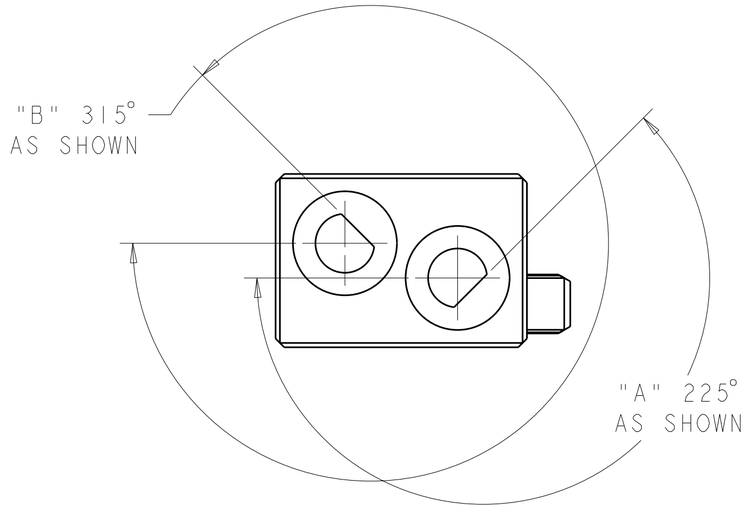


6-1469958-8

9-1469958-9

THIS DRAWING IS A CONTROLLED DOCUMENT FOR TYCO ELECTRONICS CORPORATION. IT IS SUBJECT TO CHANGE AND THE CONTROLLING ENGINEERING ORGANIZATION SHOULD BE CONTACTED FOR THE LATEST REVISION.

DIMENSIONS: mm

TOLERANCES UNLESS OTHERWISE SPECIFIED:

| | |
|---|---|
| 0 PLC | ±0.2 |
| 1 PLC | ±0.5 |
| 2 PLC | ±0.13 |
| 3 PLC | ±0.013 |
| 4 PLC | ±0.0001 |
| ANGLES | ±0.5 |

MATERIAL: ZAMAK 3

FINISH: NICKEL

DWN B.CARBO 14FEB2006
CHK R.PATTERSON 14FEB2006
APVD R.PATTERSON 14FEB2006

PRODUCT SPEC -

APPLICATION SPEC -

WEIGHT -

CUSTOMER DRAWING

Tyco Electronics
Tyco Electronics
Harrisburg, PA 17105-3608

NAME
ATCA GUIDE MODULE
(FRONT BOARD - K1/K2)
-

| SIZE | CAGE CODE | DRAWING NO | RESTRICTED TO |
|---|---|---|---|
| A2 | 00779 | C-1469958 | - |

SCALE 2:1 SHEET 2 OF 2 REV A