Jan.1.2022 Copyright 2022 HIROSE ELECTRIC CO., LTD. All Rights Reserved.
In case of consideration for using Automotive equipment / device which demand high reliability, kindly contact our sales window correspondents.

	COUNT	DESCRIPTION OF REVISIONS	BY	CHKD	DATE		COUNT	DESCRIPTION OF REVISIONS	BY	CHKD	DATE
△					. .	△					. .
△					. .	△					. .
△					. .	△					. .

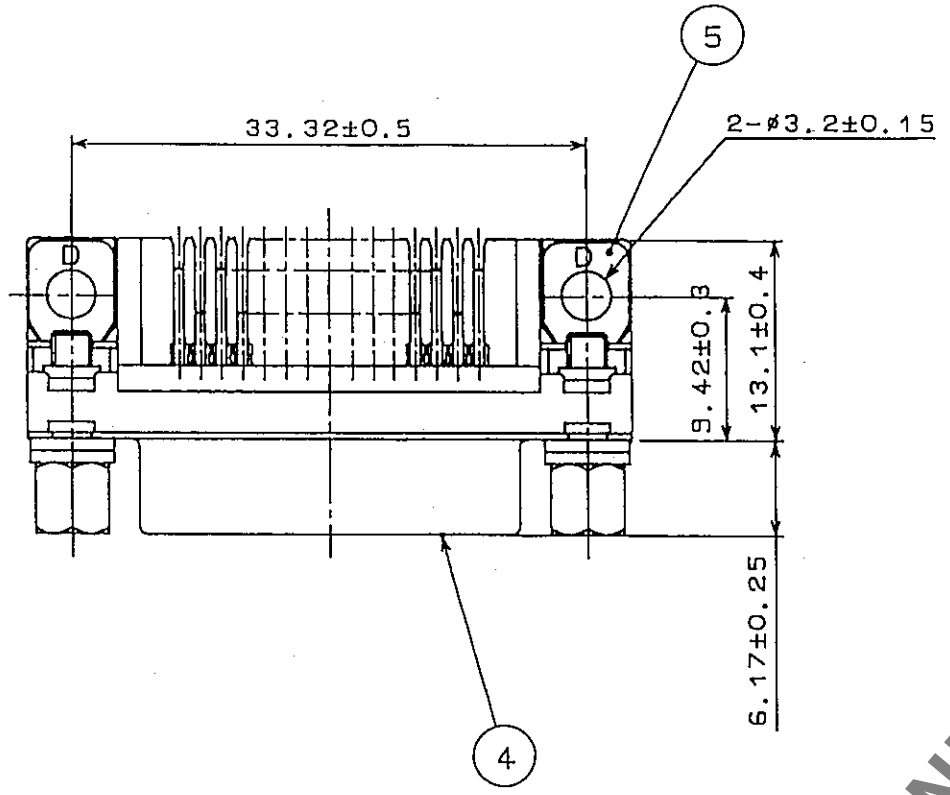

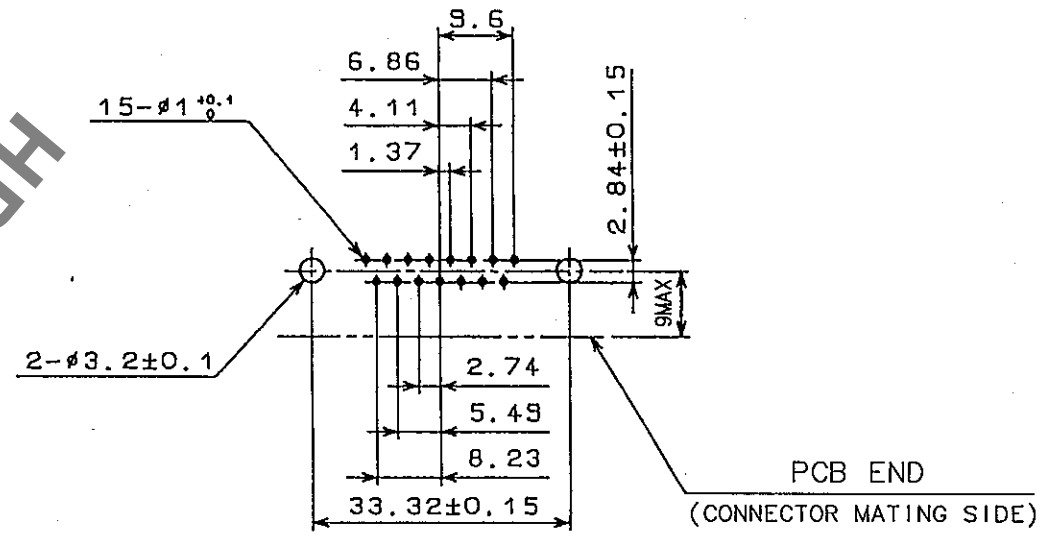

NOTE. PLEASE KEEP THE TOLERANCE TO LESS THAN ±0.1 FOR THE DIMENSIONS WITHOUT TOLERANCE.

RECOMMENDED PC BOARD HOLE PATTERN
(SCALE 1:1)

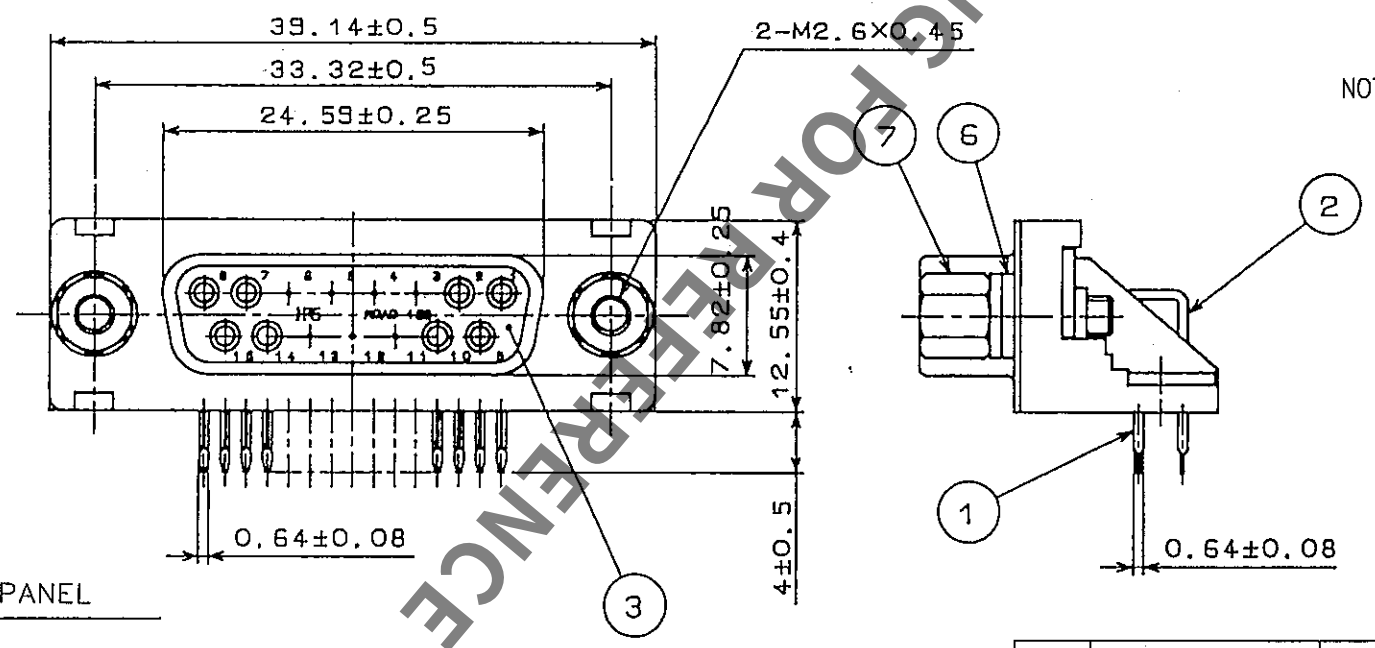

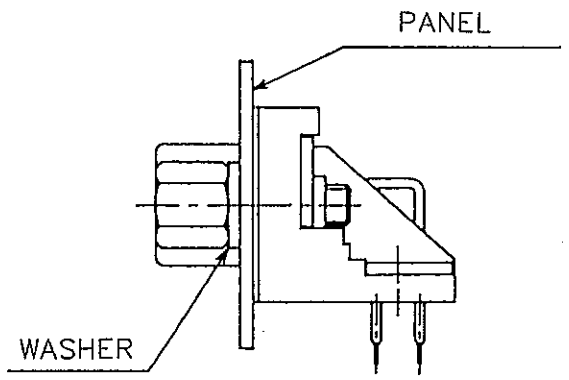

REMOVE ONE WASHER FOR 0.8-1.2 OF PANEL THICKNESS. REMOVE TWO WASHERS FOR 1.6 OF PANEL THICKNESS.

PATTERN OF MOUNTING CONNECTOR ON PCB

NO.	MATERIAL	FINISH, REMARKS	NO.	MATERIAL	FINISH, REMARKS
4	STEEL	NICKEL PLATING			
3	PBT	UL94V-0(BLACK)	7	STEEL	NICKEL PLATING
2	PHOSPHOR BRONZE	SELECTIVE GOLD PLATING 0.2μm	6	STEEL	NICKEL PLATING
1	PHOSPHOR BRONZE	SELECTIVE GOLD PLATING 0.2μm	5	STEEL	NICKEL PLATING

CODE NO.(OLD)	DRAWN	DESIGNED	CHECKED	APPROVED	RELEASED
CL	T.Kameya 03·7·31	T.Kameya 03·7·31	Y.Enami 03·08·04	H.Miwa 03·08·04	. .

SCALE 2 : 1	DRAWING NO. EDC3-021224-01	PART NO. RDAD-15SA-LNA(55)
UNITS mm	HRS HIROSE ELECTRIC CO., LTD	CODE NO. CL211-0410-2-55 1/1

TO
Q

FORM NO.229

HRS DRAWING FOR REFERENCE