THIS DRAWING IS UNPUBLISHED. RELEASED FOR PUBLICATION 20
© COPYRIGHT 20 TE CONNECTIVITY ALL RIGHTS RESERVED.

REVISIONS

P	LTR	DESCRIPTION	DATE	DWN	APVD
	B	REVISED PER ECO-14-013272	09SEP2014	AP	DD

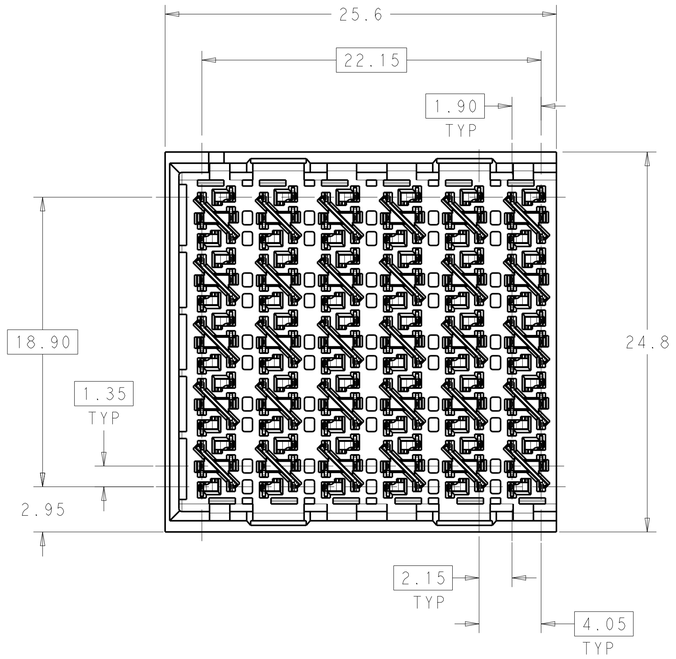

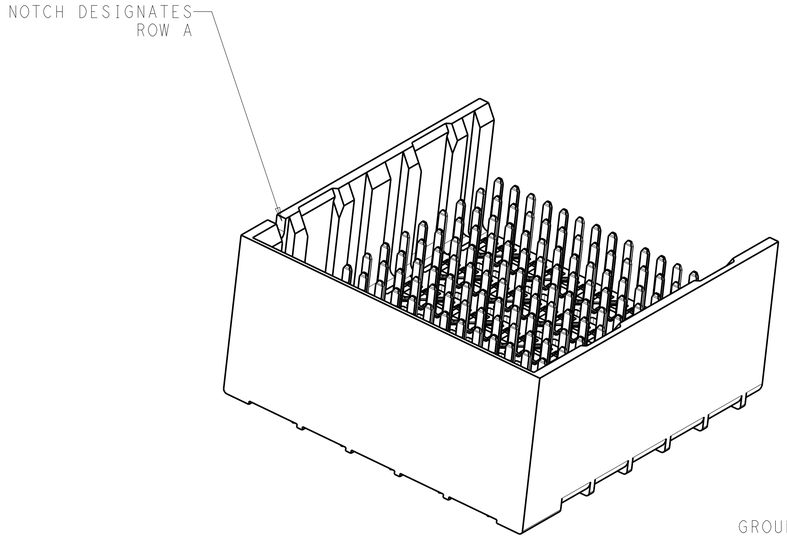

1. MATERIAL:
   HOUSING: LCP, GLASS FILLED, UL94V-0.
   TERMINALS: HIGH PERFORMANCE COPPER ALLOY.
2. FINISH:
   30µ" MIN GOLD IN CONTACT AREA. SELECTIVE TIN ON PCB TAILS, NICKEL OVERALL.

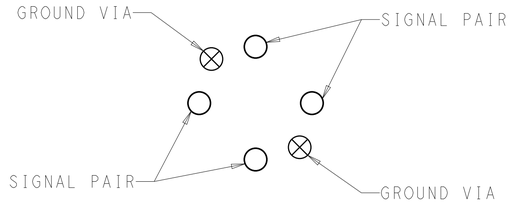

DETAIL X
SCALE 16:1

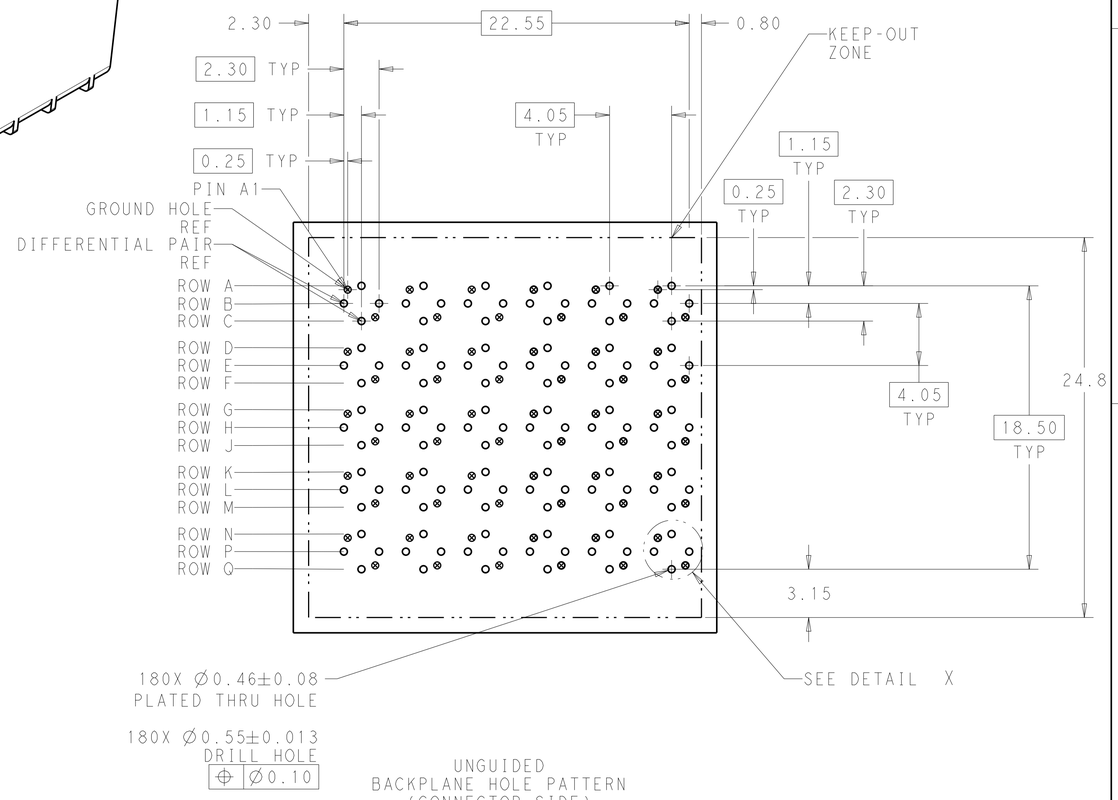

UNGUIDED
BACKPLANE HOLE PATTERN
(CONNECTOR SIDE)

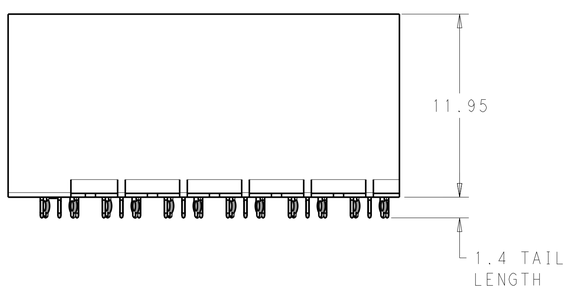

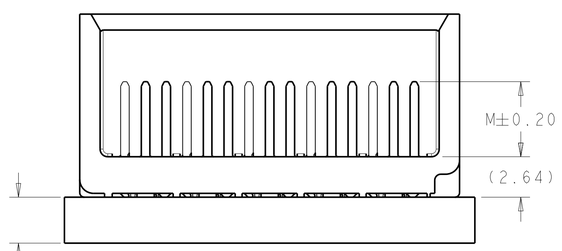

REFER TO WWW.TE.COM
FOR PRODUCT AVAILABILITY

2	5.5	2143631-2
2	4.9	2143631-1
FINISH	DIM M	PART NUMBER

THIS DRAWING IS A CONTROLLED DOCUMENT.

DIMENSIONS: mm

TOLERANCES UNLESS OTHERWISE SPECIFIED:
0 PLC ±-
1 PLC ±0.25
2 PLC ±0.13
3 PLC ±-
4 PLC ±-
ANGLES ±-

MATERIAL 1
FINISH SEE TABLE

DWN KIRAN HOLAL 01DEC2012
CHK D.DIXON 01DEC2012
APVD D.DIXON 01DEC2012
PRODUCT SPEC -
APPLICATION SPEC -
WEIGHT -

TE Connectivity

NAME IMPACT, ORTHOGONAL, 5 PAIR, 12 COLUMN HEADER, UNGUIDED, LEFT END WALL SIGNAL MODULE, 0.46 PTH

SIZE A1 | CAGE CODE 00779 | DRAWING NO C-2143631 | RESTRICTED TO -

CUSTOMER DRAWING | SCALE 5:1 | SHEET 1 OF 1 | REV B

4805 (3/13)