**MICRO SWITCH**
FREEPORT, ILLINOIS U.S.A.
A DIVISION OF HONEYWELL
FED. MFG. CODE 91929

# SWITCH-TOGGLE

CATALOG LISTING
## 2TW1 SERIES
## CHART 1 ★

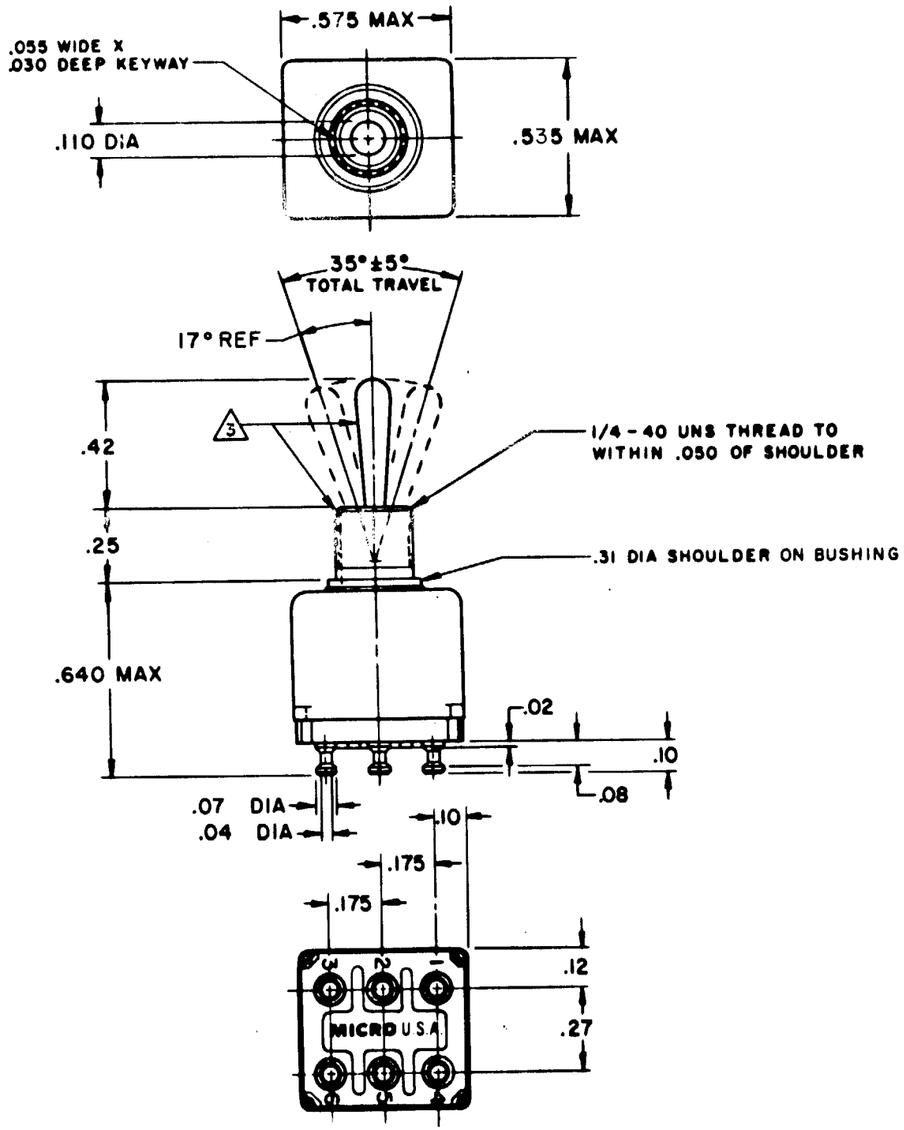


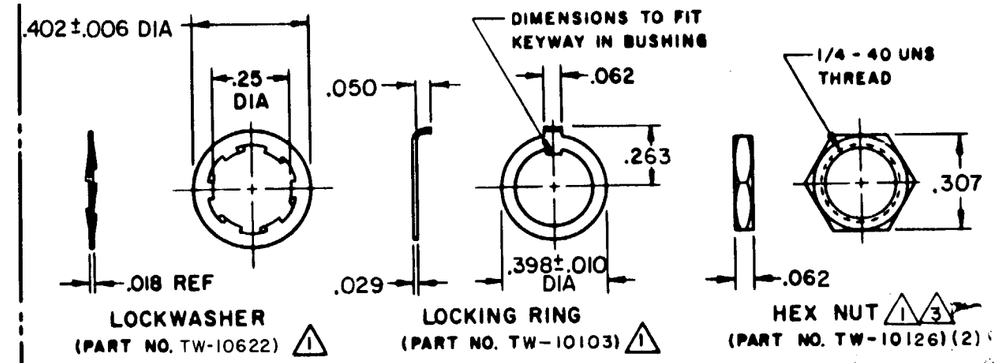


| CATALOG LISTING | CIRCUIT WITH TOGGLE IN | | | |
|---|---|---|---|---|
| | ONE EXTREME POSITION (KEYWAY) 2-1 5-4 | CENTER POSITION | OTHER EXTREME POSITION (OPPOSITE KEYWAY) 2-3 5-6 | MS NO. |
| 2TW1-1 | ON | OFF | ON | MS27717-21-1 |
| 2TW1-2 | OFF | NONE | ON | MS27717-22-1 |
| 2TW1-3 | ON | NONE | ON | MS27717-23-1 |
| 2TW1-5 | MOM ON | OFF | ON | MS27717-31-1 |
| 2TW1-7 | MOM ON | OFF | MOM ON | MS27717-27-1 |
| 2TW1-8 | MOM ON | NONE | ON | MS27717-26-1 |
| | | | | |
| | | | | |
| | | | | |

NOTES
1. FURNISHED UNASSEMBLED
2. TERMINALS ARE PLATED FOR SOLDERING
3. MATTE FINISH

THIS DRAWING COVERS A PROPRIETARY ITEM AND IS THE PROPERTY OF MICRO SWITCH, A DIVISION OF HONEYWELL. THIS DRAWING IS NOT TO BE COPIED OR USED WITHOUT THE APPROVAL OF MICRO SWITCH

CHARACTERISTICS

ELECTRICAL DATA
CONTACT ARRANGEMENT
L117
5A 125 VAC

SCALE 2:1
DO NOT SCALE PRINT
TOLERANCES
DESIGN UNITS: SI METRIC / U.S. CUSTOMARY
THIRD ANGLE PROJECTION
WEIGHT .020 LB MAX

REVISIONS
A C057003 TSK 3 FEB 86
B C059236 JAP 27 MAR 86
C C062939 TSK 24 FEB 88

2TW1 SERIES CHART 1
M
DRAWING NUMBER
ISSUE 15
RELEASE NO. SR-12474
REPLACES X35315
CHECK
DRAWN TSK 3 FEB 86
FO-52851-B