Alle Rechte vorbehalten/ *All rights reserved*

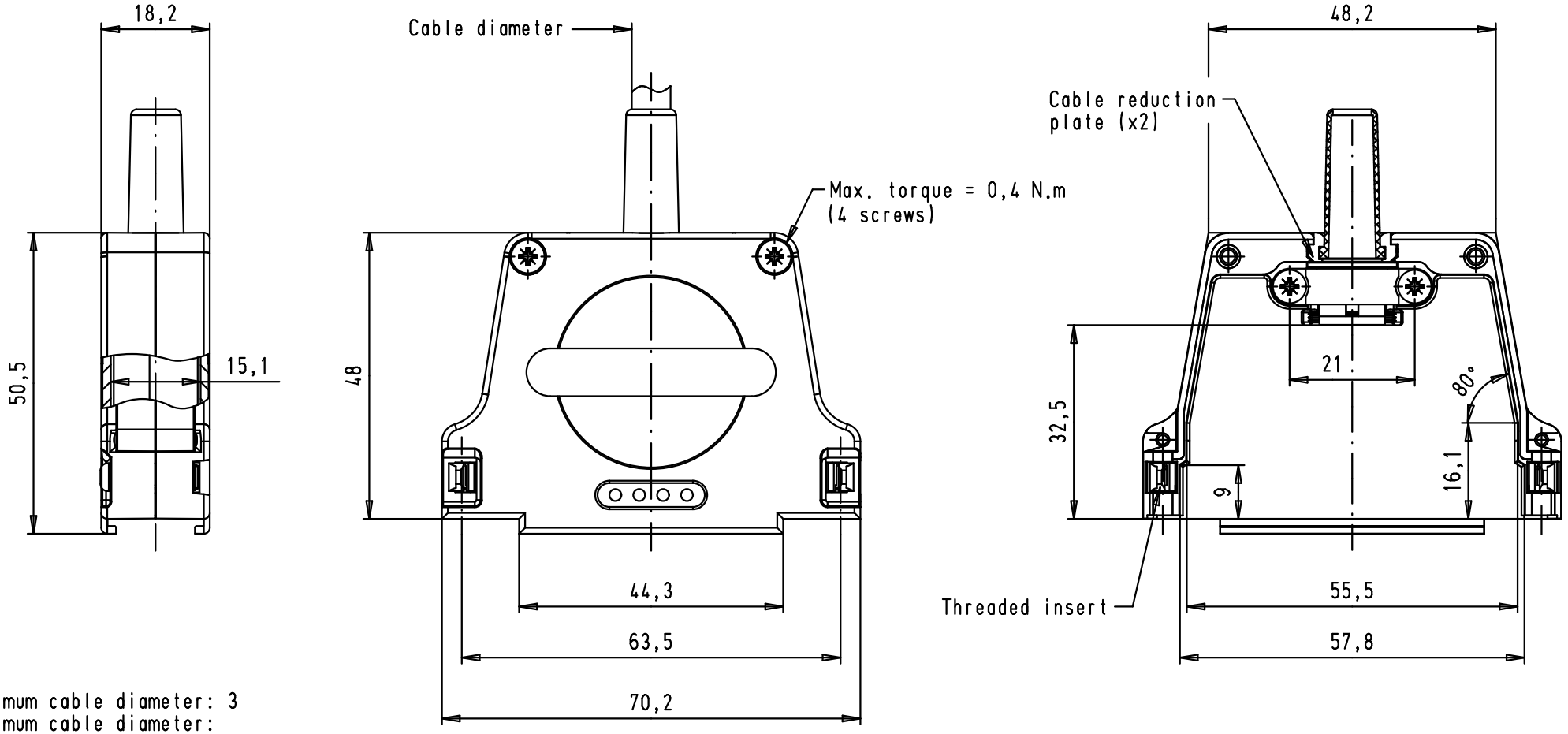

Minimum cable diameter: 3
Maximum cable diameter:
- with rubber bushing: 9
- without rubber bushing: 12
- without reduction plate: 15

09 67 037 0323	M3
09 67 037 0322	4-40 UNC
Part number	Threaded insert

Mod.	Dat.	Name
EC00368	07/07/09	PK
35063	27/06/08	PK

	Dat.	Name
Detail.	27/06/08	PK
Insp.		
Stand.		

All Dim. in mm
Orig. Size DIN A 4

D-Sub, 37 poles, top entry, straight metal hood with threaded inserts, for cable to cable application with latching

Maßstab/ *Scale* 1:1

HARTING EURL
F-95972 Paris

TB 09 67 037 032X

Sub.

Blatt/ *Page* 1/1