Alle Rechte vorbehalten/ *All rights reserved*

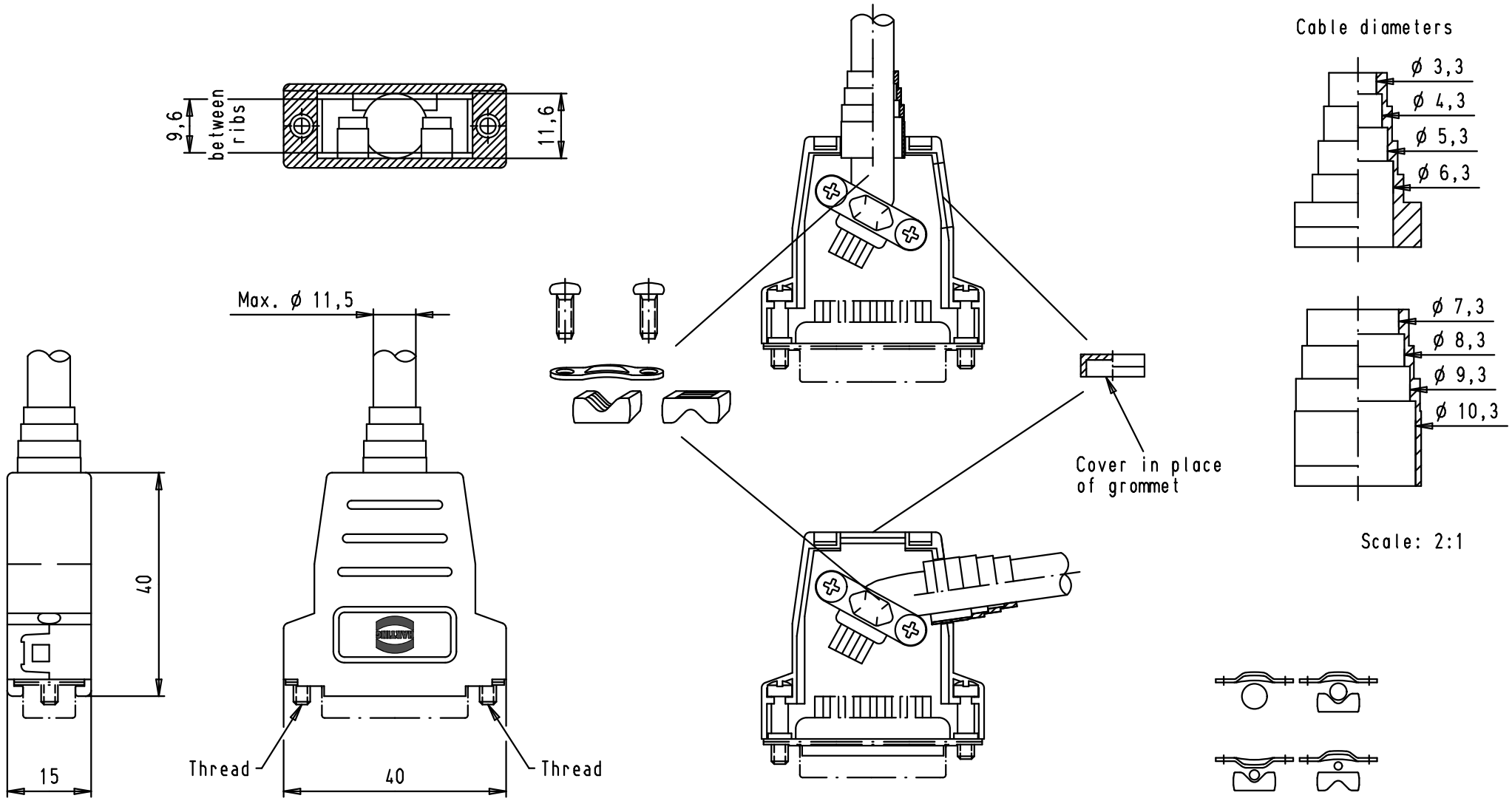

09 67 015 0465	4-40 UNC
09 67 015 0464	M3
Part number	Thread

				Dat.	Name
			Detail.	15/02/11	SC
			Insp.	15/02/11	JB
			Stand.		
EC02864					
Mod.	Dat.	Name			

All Dim. in mm
Orig. Size DIN A 4

D-Sub, 15 poles, metallized, top/side entry hood, short screws

Maßstab/ *Scale* 1:1 2:1

HARTING EURL
F-95972 Paris

TB 09 67 015 046x

Sub.

Blatt/ *Page* 2/2