THIS DRAWING IS UNPUBLISHED. RELEASED FOR PUBLICATION -,- .
© COPYRIGHT - BY TYCO ELECTRONICS CORPORATION. ALL INTERNATIONAL RIGHTS RESERVED.

LOC	DIST
AF	50

REVISIONS

P	LTR	DESCRIPTION	DATE	DWN	APVD
	B	REVISED PER ECR-10-006099	07JUL10	HMR	PD

1 CONTINUOUS STRIP ON REEL

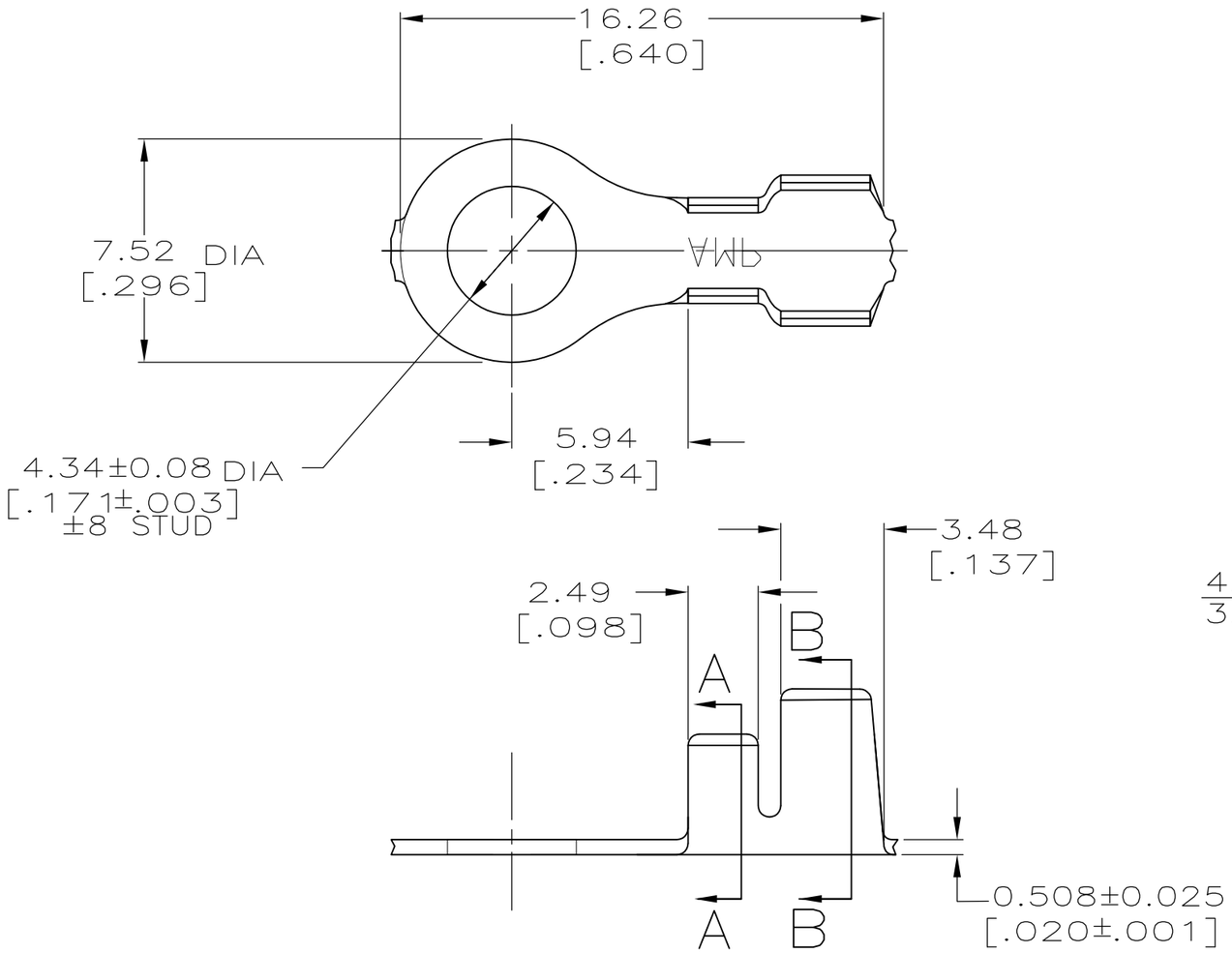

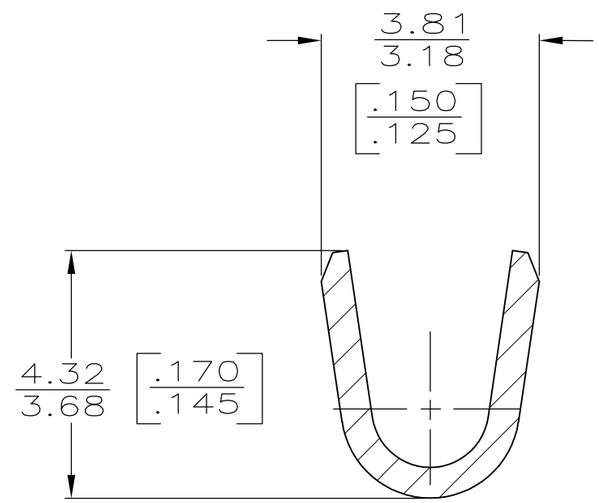

SECTION A–A
SCALE 10:1

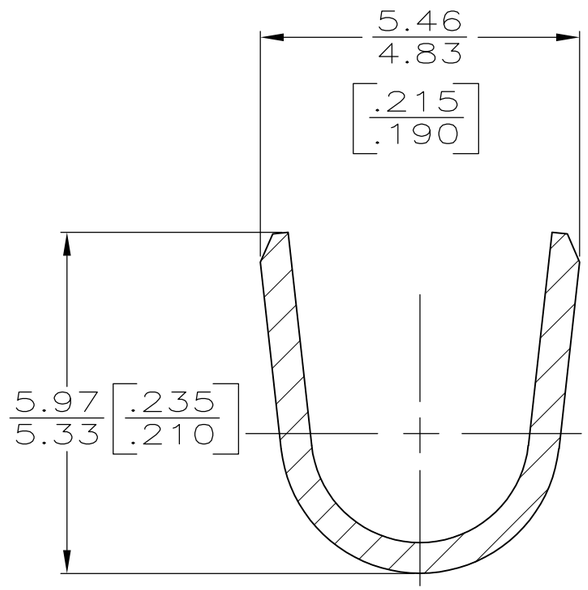

SECTION B–B
SCALE 10:1

MATERIAL	INSULATION RANGE	WIRE RANGE	PART NO.
H03 PHOS BRONZE	3.05–4.32 [.120–.170] DIA	18–14 AWG	1217160–1

TYPE	WIDTH	STRIP LENGTH ±0.38 [±.015]	TYPE	WIDTH	HEIGHT	WIRE
F OR O	4.57 [.180]	4.06 [.160]	F	3.05 [.120]	2.03 [.080]	[14]
					1.83 [.072]	[16]
					1.70 [.067]	[18]
INSUL BARREL CRIMP			WIRE BARREL CRIMP		±0.051 [±.002]	

THIS DRAWING IS A CONTROLLED DOCUMENT.

DIMENSIONS: mm [INCHES]

TOLERANCES UNLESS OTHERWISE SPECIFIED:

0 PLC	± –
1 PLC	± –
2 PLC	± 0.25 [.010]
3 PLC	± –
4 PLC	± –
ANGLES	± –

MATERIAL: SEE TABLE

FINISH: TIN

DWN PHILLIP M FORTNEY 24MAR1999
CHK JEFF R RUTH 24MAR1999
APVD JEREMY DUNCAN 24MAR1999
PRODUCT SPEC —
APPLICATION SPEC —
WEIGHT —

Tyco Electronics
Tyco Electronics Corporation
Harrisburg, PA 17105–3608

NAME: RING

SIZE	CAGE CODE	DRAWING NO	RESTRICTED TO
A3	00779	C-1217160	—

CUSTOMER DRAWING

SCALE	SHEET	REV
5:1	1 OF 1	B