THIS DRAWING IS UNPUBLISHED. RELEASED FOR PUBLICATION JUN. 2007
© COPYRIGHT 2007 BY TYCO ELECTRONICS CORPORATION. ALL RIGHTS RESERVED.

LOC	DIST
J	-

REVISIONS 変更

P	LTR	DESCRIPTION	DATE	DWN	APVD
	A1	REVISED ECR-07-024704	17OCT2007	T.S	D.M

-1:AS SHOWN

NOTE

1. MATERIAL:POLYBUTYLEN TEREPHTHALATE (94V-0)
COLOR:BLACK
2. THE SHAPE, SIZE AND POSITION OF THE CHARACTER SHOW THE OUTLINE. THEY DON'T SHOW DETAILS.
3. ALLOCTE OF D3-SLOT,ROW ID:B,CIRCUIT NO.:3

注記

1. 材料：ポリブチレンテレフタレート（94V-0）
色：黒
2. 文字の形状、大きさ、および位置については、大略を示すものであり、詳細を示すものではありません。
3. D3スロットには、ROW ID:B、CIRCUIT NO.:3を割り当てる

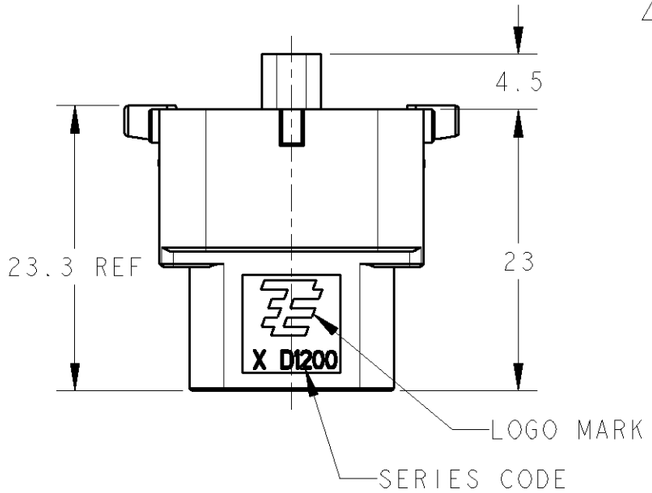

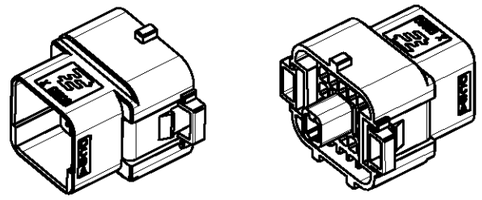

SCALE 1:1

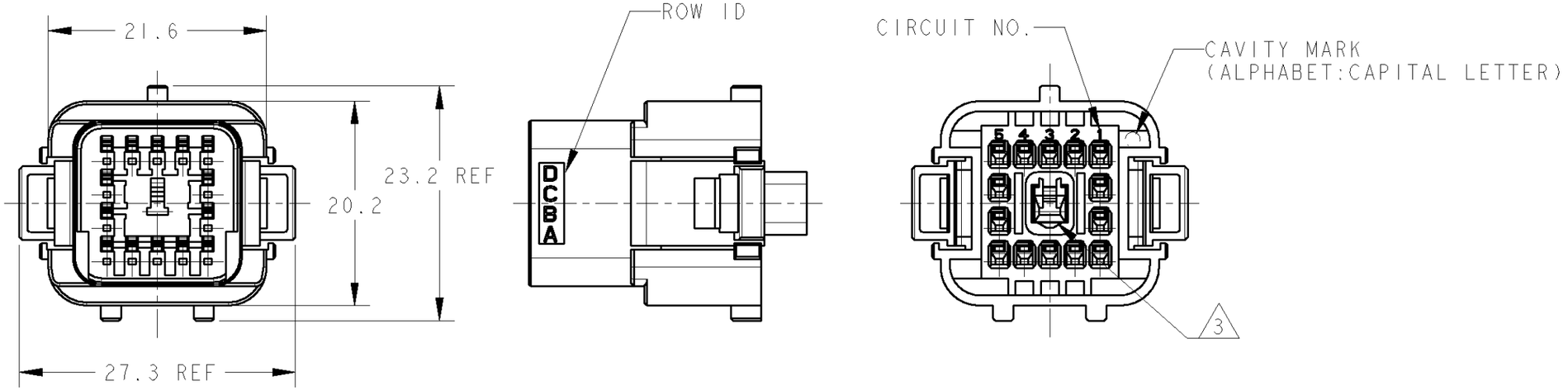

THIS DRAWING IS A CONTROLLED DOCUMENT FOR TYCO ELECTRONICS CORPORATION IT IS SUBJECT TO CHANGE AND THE CONTROLLING ENGINEERING ORGANIZATION SHOULD BE CONTACTED FOR THE LATEST REVISION.

DIMENSIONS: 単位: mm

TOLERANCES UNLESS OTHERWISE SPECIFIED:
一般公差 ±0.3,±3°
0 PLC ±
1 PLC ±
2 PLC ±
3 PLC ±
4 PLC ±
ANGLES ±

MATERIAL 材料 1

FINISH 仕上

DWN T.SAMI 25JUN2007
CHK D.MITSUGI 27JUL2007
APVD D.MITSUGI 27JUL2007
PRODUCT SPEC 製品規格 108-78417
APPLICATION SPEC 取付適用規格 411-78287
WEIGHT 5.60 g

Tyco Electronics
Tyco Electronics Corporation.
Kawasaki, Japan

NAME 名称
MULTI ENCLOSURE CONN (M)
DYNAMIC D1200 SEQ TYPE
TAB HSG 15POS

SIZE	CAGE CODE	DRAWING NO 番号	RESTRICTED TO
A3	00779	C-1981133	-

CUSTOMER DRAWING | SCALE 尺度 2:1 | SHEET 1 OF 1 | REV A1

AMP 1470-19 REV 31MAR2000

Pro/ENGINEER DRAWING