THIS DRAWING IS UNPUBLISHED. RELEASED FOR PUBLICATION 20
© COPYRIGHT 20 BY - ALL RIGHTS RESERVED.

LOC	DIST
AF	-

REVISIONS

P	LTR	DESCRIPTION	DATE	DWN	APVD
	A	REVISED PER ECR-15-014244	23SEP2015	NK	DC

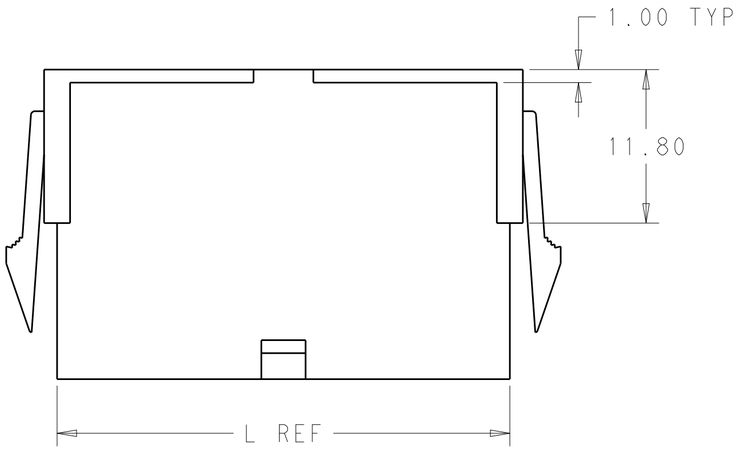

1. POLYAMIDE, UL94-V0, COLOR: NATURAL (WHITE)
2. GLOW WIRE FLAMMABILITY INDEX (GWFI) 850°C AT LEAST ACC. TO IEC 60335-1
3. GLOW WIRE IGNITION TEMPERATURE (GWIT) 775°C AT LEAST, ACC. TO IEC 60335-1
4. GLOW WIRE END PRODUCT TEMPERATURE (GWEPT) 750°C NO FLAME, ACC. TO IEC 60335-1

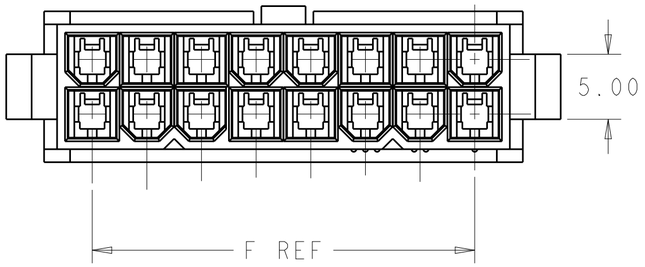

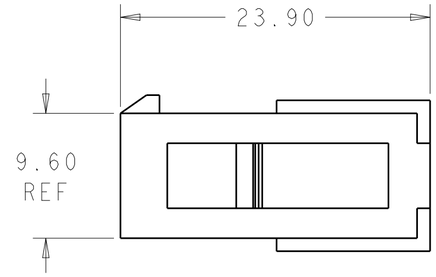

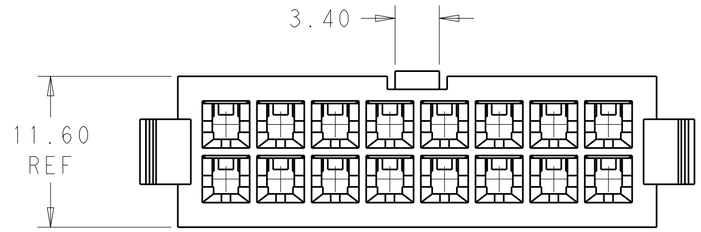

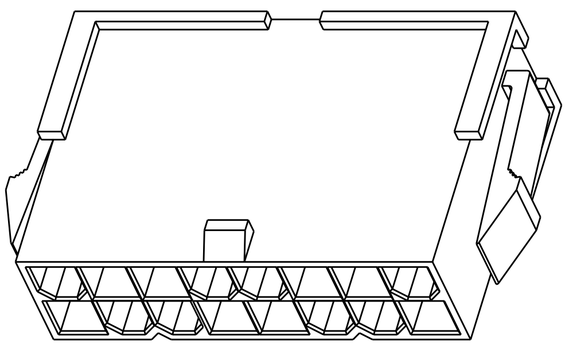

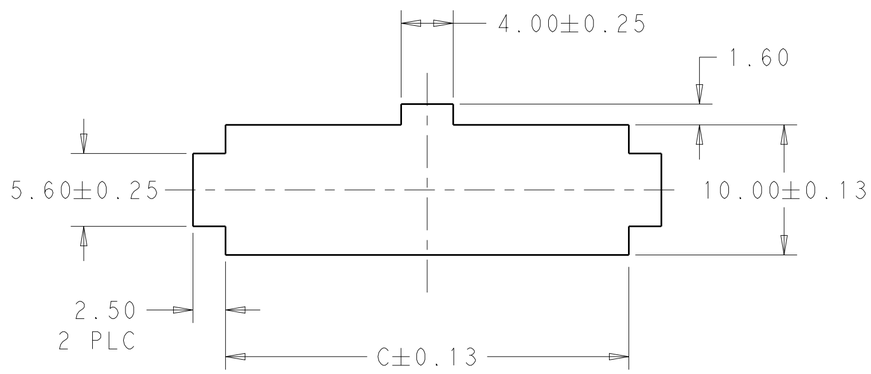

RECOMMENDED CUT-OUT FOR
2.00 MAX THICK PANEL

PANEL MUST BE PUNCHED OUT SO THAT THE HOUSING ENTERS THE PANEL IN THE SAME DIRECTION AS THE PUNCH.

DIM C	DIM F	DIM L	NO. OF POS	PART NO.
52.00	46.2	51.60	24	2-2296207-4
47.80	42.0	47.40	22	2-2296207-2
43.60	37.8	43.20	20	2-2296207-0
39.40	33.6	39.00	18	1-2296207-8
35.20	29.4	34.80	16	1-2296207-6
31.00	25.2	30.60	14	1-2296207-4
26.80	21.0	26.40	12	1-2296207-2
22.60	16.8	22.20	10	1-2296207-0
18.40	12.6	18.00	8	2296207-8
14.20	8.4	13.80	6	2296207-6
10.00	4.2	9.60	4	2296207-4
5.80	--	5.40	2	2296207-2

THIS DRAWING IS A CONTROLLED DOCUMENT.

DIMENSIONS: mm

TOLERANCES UNLESS OTHERWISE SPECIFIED:
0 PLC ±-
1 PLC ±-
2 PLC ±0.25
3 PLC ±-
4 PLC ±-
ANGLES ±-
FINISH

MATERIAL 1

DWN NAGALAKSHMI K 23SEP2015
CHK CHIARELLI, DAVIDE 23SEP2015
APVD CHIARELLI, DAVIDE 23SEP2015
PRODUCT SPEC 108-2112
APPLICATION SPEC 114-13172
WEIGHT -

TE Connectivity

NAME PANEL MOUNT PLUG HOUSING VAL-U-LOK, GLOW WIRE AND V0

SIZE A2 | CAGE CODE 00779 | DRAWING NO C-2296207 | RESTRICTED TO -

Customer Drawing | SCALE 3:1 | SHEET 1 OF 1 | REV A

1471-9 (3/11)