THIS DRAWING IS UNPUBLISHED. RELEASED FOR PUBLICATION 20
© COPYRIGHT 20 BY - ALL RIGHTS RESERVED.

REVISIONS

P	LTR	DESCRIPTION	DATE	DWN	APVD
	99	INITIAL RELEASE	10MAR2017	SK	SS

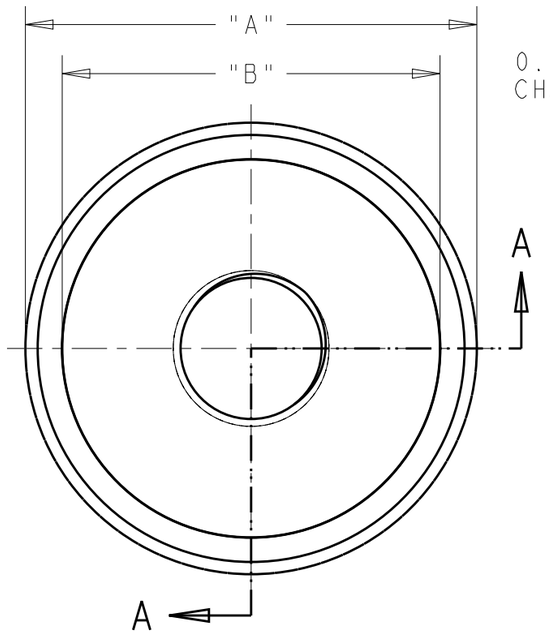

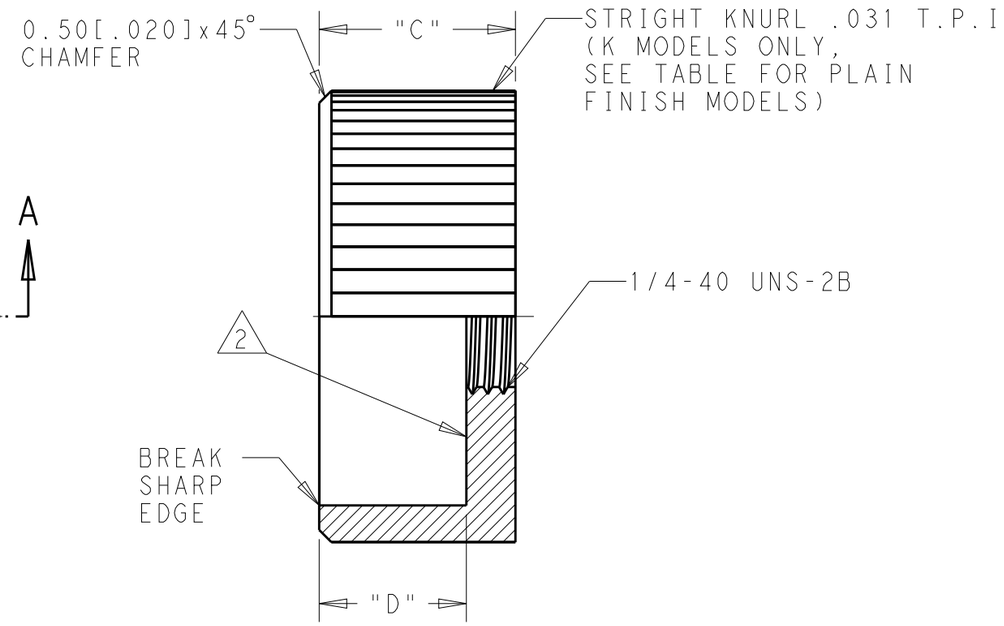

BUTTON GUARD G-13-K
SHOWN

SECTION A-A

NOTE:

1. 32 FINISH OR BETTER.

2. BLACK ANODIZED GUARDS MAY HAVE A SMALL AREA ON THE INNER SURFACE WHERE THERE IS NO ANODIZE DUE TO THE ANODIZING PROCESS.

DIM "D"	DIM "C"	DIM "B"	DIM "A" ±0.30[.012]	FINISH	MATERIAL	MODEL NO.	TE PART NUMBER
6.00 [.236]	8.00 [.315]	15.4 [.610]	18.4 [.728]	CHROME PLATED, KNURL	BRASS	G-13-KC	9-1437627-2
				BLACK ANODIZE, KNURL	ALUMINUM 5056-H18	G-13-KB	9-1437627-1
				CLEAR ANODIZE, KNURL	ALUMINUM 5056-H18	G-13-KA	9-1437627-0
				CHROME PLATED, PLAIN	BRASS	G-13-C	8-1437627-9
				BLACK ANODIZE, PLAIN	ALUMINUM 5056-H18	G-13-B	8-1437627-8
				CLEAR ANODIZE, PLAIN	ALUMINUM 5056-H18	G-13-A	8-1437627-7
6.00 [.236]	8.00 [.315]	10.4 [.413]	13.4 [.531]	CHROME PLATED, KNURL	BRASS	G-12-KC	8-1437627-6
				BLACK ANODIZE, KNURL	ALUMINUM 5056-H18	G-12-KB	8-1437627-5
				CLEAR ANODIZE, KNURL	ALUMINUM 5056-H18	G-12-KA	8-1437627-4
				CHROME PLATED, PLAIN	BRASS	G-12-C	8-1437627-3
				BLACK ANODIZE, PLAIN	ALUMINUM 5056-H18	G-12-B	8-1437627-2
				CLEAR ANODIZE, PLAIN	ALUMINUM 5056-H18	G-12-A	8-1437627-1

THIS DRAWING IS A CONTROLLED DOCUMENT.

DIMENSIONS: mm[INCH]

TOLERANCES UNLESS OTHERWISE SPECIFIED:
0 PLC ±-
1 PLC ±-
2 PLC ±-
3 PLC ±0.13[.005]
4 PLC ±-
ANGLES ± ½°

MATERIAL SEE TABLE -

FINISH SEE TABLE -

DWN 10MAR2017 SHIVAKUMAR S S
CHK 10MAR2017 SANJAY SHINDIKAR
APVD 10MAR2017 SANJAY SHINDIKAR
PRODUCT SPEC -
APPLICATION SPEC -
WEIGHT -

TE Connectivity

NAME BUTTON GUARD -

SIZE	CAGE CODE	DRAWING NO	RESTRICTED TO
A3	-	C-1437627	-

CUSTOMER DRAWING

SCALE 2:1 SHEET 1 OF 1 REV 99

1470-19 (3/13)