THIS DRAWING IS UNPUBLISHED. RELEASED FOR PUBLICATION -
© COPYRIGHT- - ALL RIGHTS RESERVED.

| LOC | DIST |
|---|---|
| A1 | – |

REVISIONS

| P | LTR | DESCRIPTION | DATE | DWN | APVD |
|---|---|---|---|---|---|
| | G2 | REVISED PER ECO-11-005150 | 31MAR2011 | RK | HMR |
| | G3 | ECR-16-016696 | 31AUG2017 | GR | MKO |

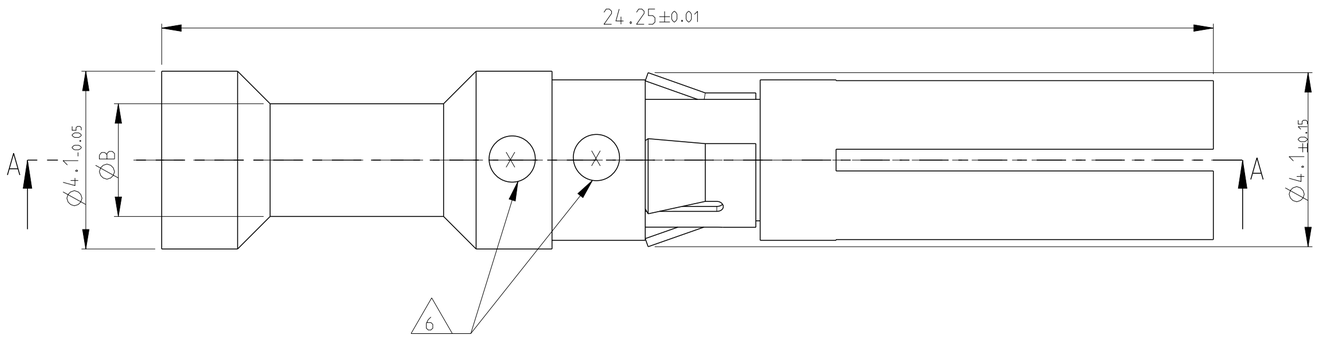


NOTES

1. MATERIAL SEE TABLE
2. SURFACE SEE TABLE
3. ASSEMBLY WEIGHT SEE TABLE
4. PACKAGING: 50 PIECES IN POLYBAG
5. PACKAGING: 500 PIECES IN POLYBAG & CARTON
6. CROSS-SECTION MARKING
7. NO VENTILATION HOLE REQUIRED AT CROSS SECTION >4.0mm²
8. SUITABLE PIN CONTACT: PN 1105300
9. SUITABLE INSERTS: SERIES HVT
10. SUITABLE CRIMP TOOL: PN 1-1105851-8
11. SUITABLE INSERTION TOOL: PN 0-1102855-6
12. SUITABLE EXTRACTION TOOL: PN 0-1102855-3
13. STANDARDS: DIN EN 61984, DIN EN 60664-1

SECTION A-A

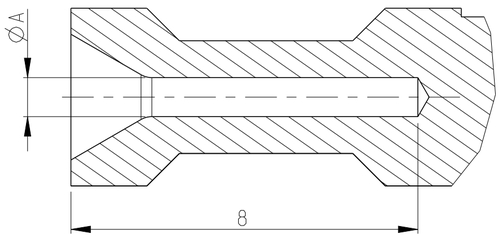


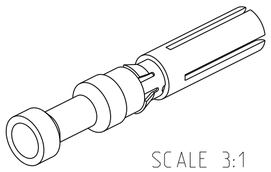

SCALE 3:1

| 4 | 5 | 0.00142 | 0.00144 | 0.00148 | 0.00145 | 0.00149 | 0.00150 | ~~0.00144~~ OBSOLETE | 0.00148 | 0.00133 | 0.00142 | 0.00144 | 0.00148 | 0.00145 | 0.00149 | 0.00150 | ASSEMBLY WEIGHT IN (Kg) 3 | | | | | | |
|---|---|---|---|---|---|---|---|---|---|---|---|---|---|---|---|---|---|---|---|---|---|---|---|
| 5-2 | 5-9 | 1 | | | | | | | | | | | | | | | Socket Contact 4.0 mm² | CuZn39Pb3 F50 | GOLD PLATING | 2.85 | 3.9 | 6 | 1 |
| 4-2 | 4-9 | | 1 | | | | | | | | | | | | | | Socket Contact 2.5 mm² | | | 2.2 | 3.2 | 5 | |
| 3-2 | 3-9 | | | 1 | | | | | | | | | | | | | Socket Contact 1.5 mm² | | | 1.8 | 3.0 | 4 | |
| 2-2 | 2-9 | | | | 1 | | | | | | | | | | | | Socket Contact 0.75-1.0 mm² | | | 1.45 | 2.6 | 3 | |
| 1-2 | 1-9 | | | | | 1 | | | | | | | | | | | Socket Contact 0.5 mm² | | | 1.1 | 2.6 | 2 | |
| 6-2 | 6-9 | | | | | | 1 | | | | | | | | | | Socket Contact 0.13-0.4 mm² | | | 0.9 | 2.6 | 1 | |
| 8-2 | 8-8 | | | | | | | 1 | | | | | | | | | Socket Contact 14 AWG | | SILVER PLATING | 2.0 | 3.2 | 8 | |
| 9-1 | 9-8 | | | | | | | | 1 | | | | | | | | Socket Contact 12 AWG | | | 2.55 | 3.6 | 9 | |
| 7-2 | 7-8 | | | | | | | | | 1 | | | | | | | Socket Contact 10 AWG | | | 3.2 | 4.1 | 7 | |
| 5-1 | 5-8 | | | | | | | | | | 1 | | | | | | Socket Contact 4.0 mm² | | | 2.85 | 3.9 | 6 | |
| 4-1 | 4-8 | | | | | | | | | | | 1 | | | | | Socket Contact 2.5 mm² | | | 2.2 | 3.2 | 5 | |
| 3-1 | 3-8 | | | | | | | | | | | | 1 | | | | Socket Contact 1.5 mm² | | | 1.8 | 3.0 | 4 | |
| 2-1 | 2-8 | | | | | | | | | | | | | 1 | | | Socket Contact 0.75-1.0 mm² | | | 1.45 | 2.6 | 3 | |
| 1-1 | 1-8 | | | | | | | | | | | | | | 1 | | Socket Contact 0.5 mm² | | | 1.1 | 2.6 | 2 | |
| 6-1 | 6-8 | | | | | | | | | | | | | | | 1 | Socket Contact 0.13-0.4 mm² | | | 0.9 | 2.6 | 1 | |
| | | HVT-C-Bu.Au.4.0 mm² | HVT-C-Bu.Au.2.5 mm² | HVT-C-Bu.Au.1.5 mm² | HVT-C-Bu.Au.0.75-1.0 mm² | HVT-C-Bu.Au.0.5 mm² | HVT-C-Bu.Au.0.13-0.4 mm² | ~~HVT-C-Bu.Ag.AWG.14~~ | HVT-C-Bu.Ag.AWG.12 | HVT-C-Bu.Ag.AWG.10 | HVT-C-Bu.Ag.4.0 mm² | HVT-C-Bu.Ag.2.5 mm² | HVT-C-Bu.Ag.1.5 mm² | HVT-C-Bu.Ag.0.75-1.0 mm² | HVT-C-Bu.Ag.0.5 mm² | HVT-C-Bu.Ag.0.13-0.4 mm² | ORDERING TEXT | | | | | | |

| 4 | 5 | DESCRIPTION | MATERIAL 1 | SURFACE 2 | ØA | ØB | CROSS SECTION MARKING 6 | ITEM NO |
|---|---|---|---|---|---|---|---|---|

THIS DRAWING IS A CONTROLLED DOCUMENT.

DIMENSIONS: mm

TOLERANCES UNLESS OTHERWISE SPECIFIED: ISO 8015, DIN ISO 2768 mH-E, DIN 16901-120
0 PLC ±
1 PLC ±
2 PLC ±
3 PLC ±
4 PLC ±
ANGLES ±

MATERIAL 1

FINISH 2

| | | |
|---|---|---|
| DWN | G.WROBLEWSKI | 04.SEP.2007 |
| CHK | T.SCHNURPFEIL | 04.SEP.2007 |
| APVD | T.SCHNURPFEIL | 04.SEP.2007 |

PRODUCT SPEC –

APPLICATION SPEC –

WEIGHT –

TE Connectivity

NAME SOCKET CONTACT SERIES HVT –

| SIZE | CAGE CODE | DRAWING NO | RESTRICTED TO |
|---|---|---|---|
| A2 | 00779 | C-1105301 | – |

CUSTOMER DRAWING | SCALE 10:1 | SHEET 1 OF 1 | REV G3