THIS DRAWING IS UNPUBLISHED. RELEASED FOR PUBLICATION -,- .
© COPYRIGHT - By - ALL RIGHTS RESERVED.

REVISIONS

P	LTR	DESCRIPTION	DATE	DWN	APVD
	H2	REVISED PER ECO-13-019645	14DEC2013	KH	MZ
	J	REVISED PER ECR-16-016563	07DEC2016	RS	MZ
	K	REVISED PER ECO-17-016115	02NOV2017	RS	MZ

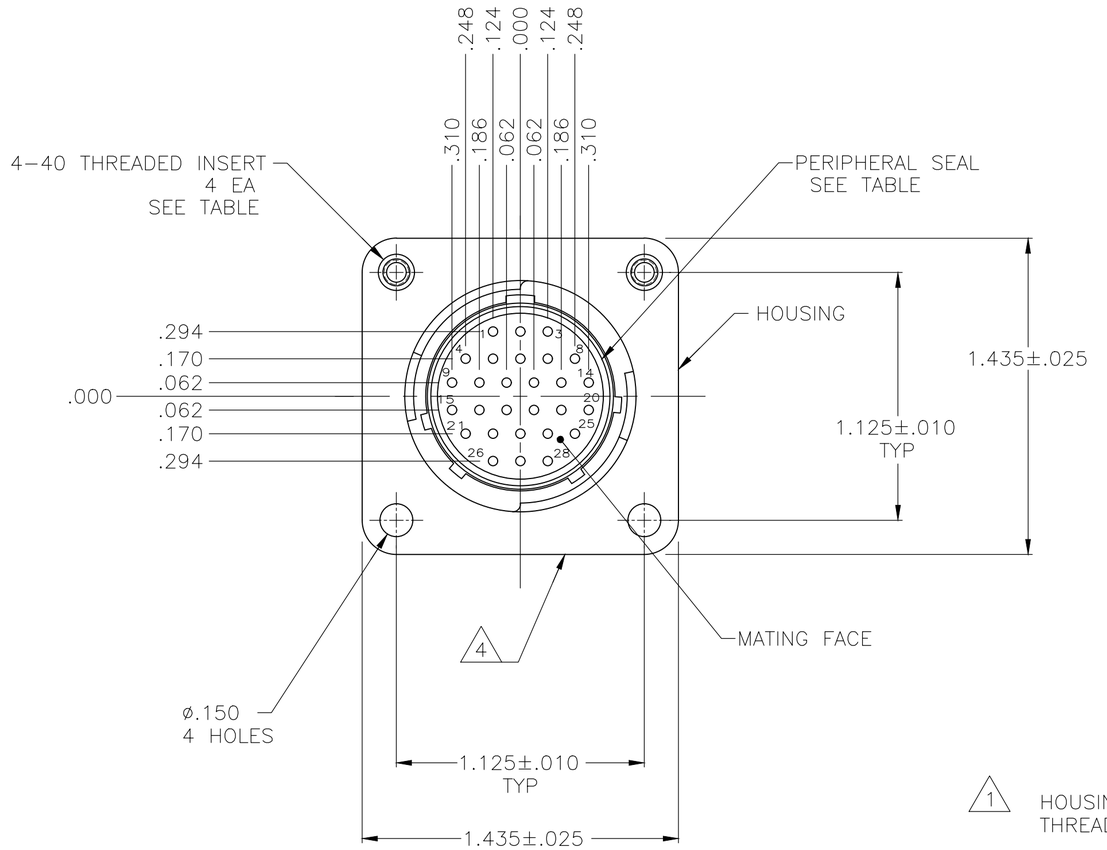

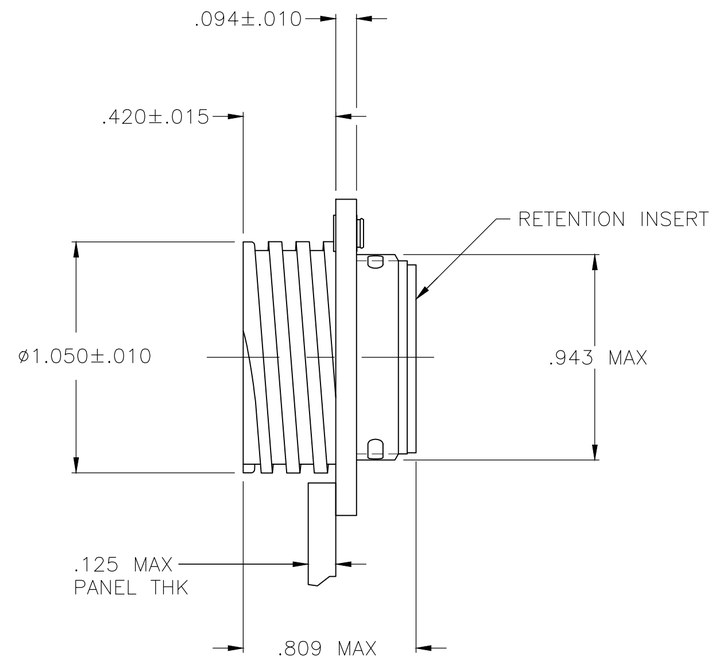

1. HOUSING & RETENTION INSERT: THERMOPLASTIC, BLACK. THREADED INSERTS: BRASS.
2. CONTACT CAVITIES IDENTIFIED BY CHARACTERS ON FRONT AND REAR FACES OF CONNECTOR.
3. WILL ACCEPT (28) SIZE 20 PIN CONTACTS.
4. PART NUMBER 205840-3 MOLDED INTO HOUSING. FINAL ASSEMBLY PART NUMBER AND DATE CODE STAMPED IN WHITE CHARACTERS OR LASER MARKED ON ANY FLANGE EDGE

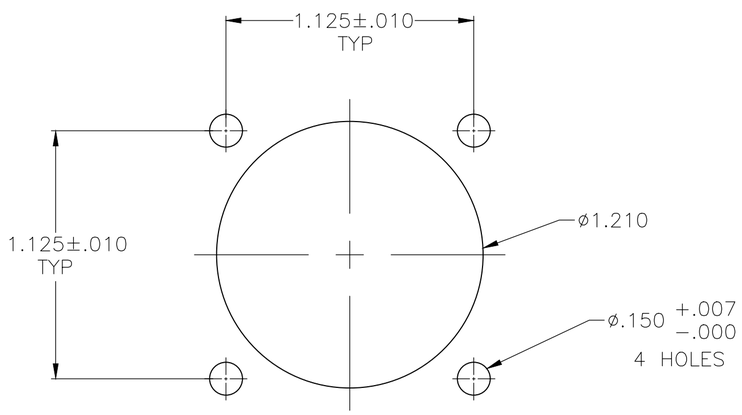

PANEL CUTOUT

OBSOLETE	YES	YES	~~205840-5~~
	NO	YES	205840-4
	NO	NO	205840-3
	PERIPHERAL SEAL	4-40 THREADED INSERTS	PART NUMBER

THIS DRAWING IS A CONTROLLED DOCUMENT.

DIMENSIONS: INCHES

TOLERANCES UNLESS OTHERWISE SPECIFIED:
0 PLC ± -
1 PLC ± -
2 PLC ± -
3 PLC ± .005
4 PLC ± -
ANGLES - ± -

MATERIAL 1

FINISH -

DWN A.STAUB BG 4/3/91
CHK W.G.LENKER 7-24-92
APVD K.BEAVER 7-24-92
PRODUCT SPEC 108-10024
APPLICATION SPEC —
WEIGHT —

TE Connectivity

NAME RECEPTACLE ASSEMBLY, STD SEX, SERIES 2, 17-28, CPC

SIZE A2 | CAGE CODE 00779 | DRAWING NO C-205840 | RESTRICTED TO —

CUSTOMER DRAWING | SCALE 2:1 | SHEET 1 OF 1 | REV K

205840