THIS DRAWING IS UNPUBLISHED. RELEASED FOR PUBLICATION 2000
© COPYRIGHT 2000 BY TYCO ELECTRONICS CORPORATION. ALL RIGHTS RESERVED.

LOC	DIST
GW	–

REVISIONS

P	LTR	DESCRIPTION	DATE	DWN	APVD
	A	-	5APR2001	BL	KM
	A1	PN added + Applic. spec. in table + pack. info	27JUN2003	FH	RL
	B	overall connector length corrected	17JUN2004	FH	RL
	B1	REV PER ECO-09-026495	30NOV09	KK	AEG

Connector layout 5

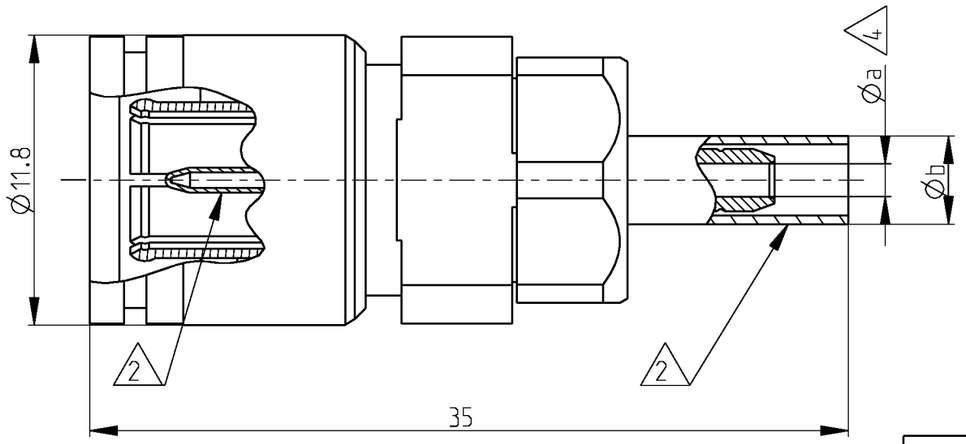

Connector layout 6

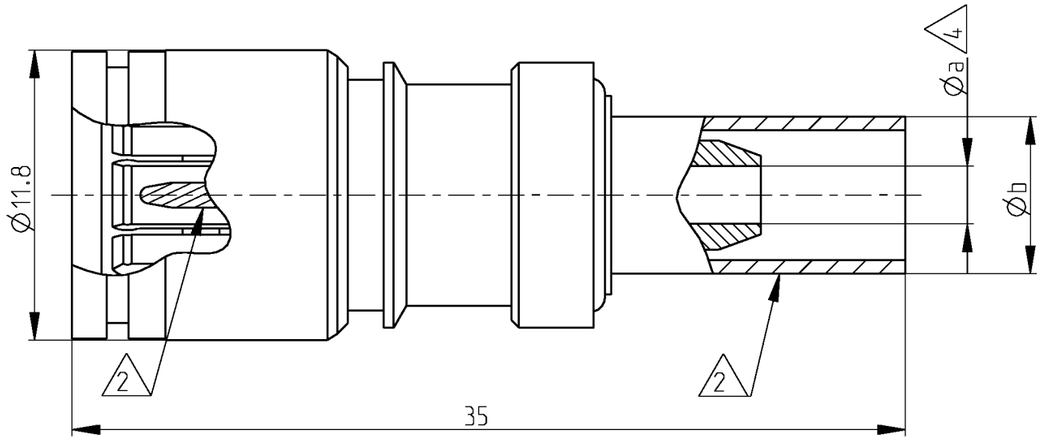

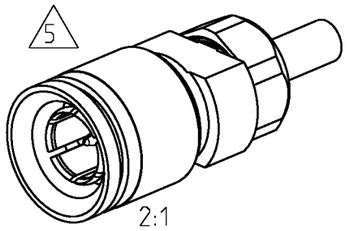

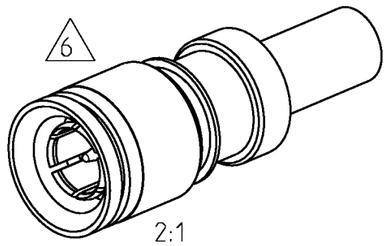

10 OBSOLETE PARTS: OBSOLETE CIS STREAMLINING PER D.RENAUD/D.SINISI

9 Bulk packaging.

8 Tray packaging.

7 Individual packaging.

6 Pre-assembled version.

5 Version with loose parts.

4 Minimum dimension.

3) Mating face according to DIN 47295/CECC 22240.

2 Supplied as loose part.

1) All dimensions are maximum dimensions unless otherwise specified.

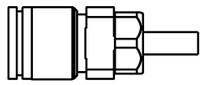

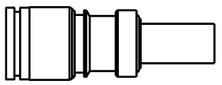

Cross reference table

Old PN	Tyco PN	Application spec.	Description	Material	Plating	Cable type	Øa	Øb
-	~~1460043-1~~ 6 10 9	114-71021	Outer cond.	CuBe	1µm Au min in contact area	02Y (St) CY 0.45/2.0	2.15	5.2
			Center cond.	CuSn6	1µm Au min in contact area			
			Dielectric	PEEK	-			
V23612-B102-P76	1393672-9 6 7	114-71021	Outer cond.	CuBe	1µm Au min in contact area	02Y (St) CY 0.45/2.0	2.15	5.2
			Center cond.	CuSn6	1µm Au min in contact area			
			Dielectric	PEEK	-			
V23612-A102-P76	1393672-3 5 7	114-71019	Outer cond.	CuBe	1µm Au min in contact area	02Y (St) CY 0.45/2.0	2.15	5.2
			Center cond.	CuSn6	1µm Au min in contact area			
			Dielectric	PEEK	-			
V23612-A102-P62	~~1393672-2~~ 5 7	114-71019	Outer cond.	CuBe	1µm Au min in contact area	02Y 12YC (mS) C6Y 0.45/2.0	2.15	5.2
			Center cond.	CuSn6	1µm Au min in contact area			
			Dielectric	PEEK	-			
10 OBSOLETE -	~~1460132-1~~ 5 8	114-71019	Outer cond.	CuBe	1µm Au min in contact area	02YS (St) CHH 0.25/1.2	1.3	3.8
			Center cond.	CuSn6	1µm Au min in contact area			
			Dielectric	PEEK	-	HF 75 0.25/1.15		

THIS DRAWING IS A CONTROLLED DOCUMENT FOR TYCO ELECTRONICS CORPORATION IT IS SUBJECT TO CHANGE AND THE CONTROLLING ENGINEERING ORGANIZATION SHOULD BE CONTACTED FOR THE LATEST REVISION.

DIMENSIONS: mm

TOLERANCES UNLESS OTHERWISE SPECIFIED:
0 PLC ±-
1 PLC ±-
2 PLC ±-
3 PLC ±-
4 PLC ±-
ANGLES ±-

MATERIAL see table
FINISH see table

DWN B. Lenvain 23FEB2001
CHK K. Mattheeuws 5APR2001
APVD R. Leeman 5APR2001
PRODUCT SPEC -
APPLICATION SPEC see table
WEIGHT -

tyco Electronics
Tyco Electronics
Oostkamp - Belgium

NAME
Straigth cable plug
1.6/5.6
(75 ohm)

SIZE	CAGE CODE	DRAWING NO	RESTRICTED TO
A3	00779	C-1393672-3	-

CUSTOMER DRAWING
SCALE 4/1 SHEET 1 OF 1 REV B1