THIS DRAWING IS UNPUBLISHED. RELEASED FOR PUBLICATION -,- .
© COPYRIGHT - By - ALL RIGHTS RESERVED.

LOC	DIST
FT	0

REVISIONS

P	LTR	DESCRIPTION	DATE	DWN	APVD
	A	NEW DRAWING PER ECO-12-018480	08NOV12	KH	MZ

1. HOUSING & ADAPTER: NYLON 6/6, BLACK.
   WIRE ENTRY SEAL: ELASTOMER, RED.

2. THIS CONNECTOR WILL ACCEPT FOUR (4) MULTIMATE SOCKET CONTACTS.

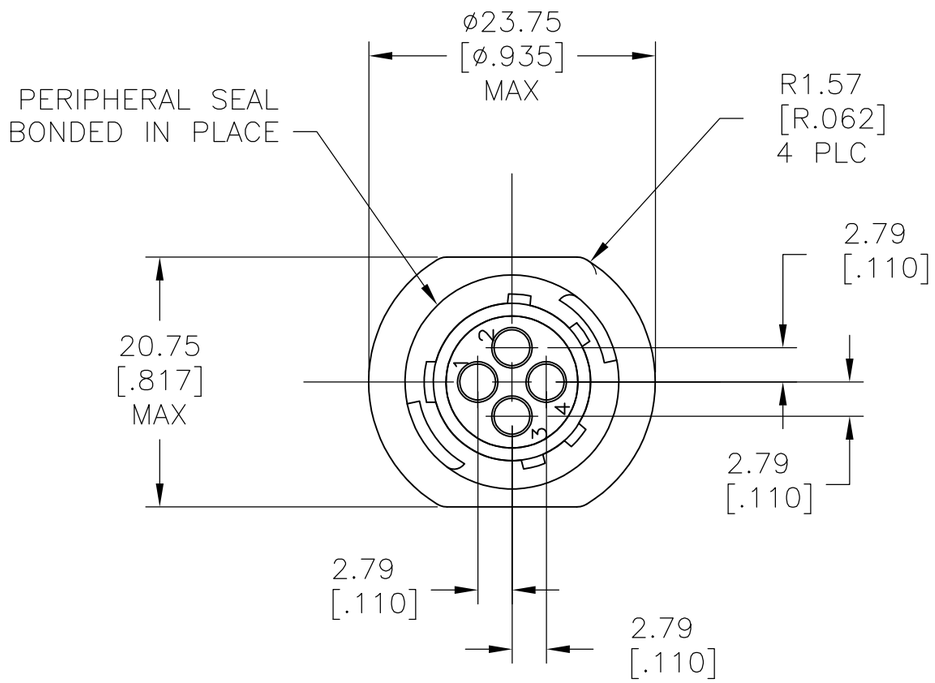

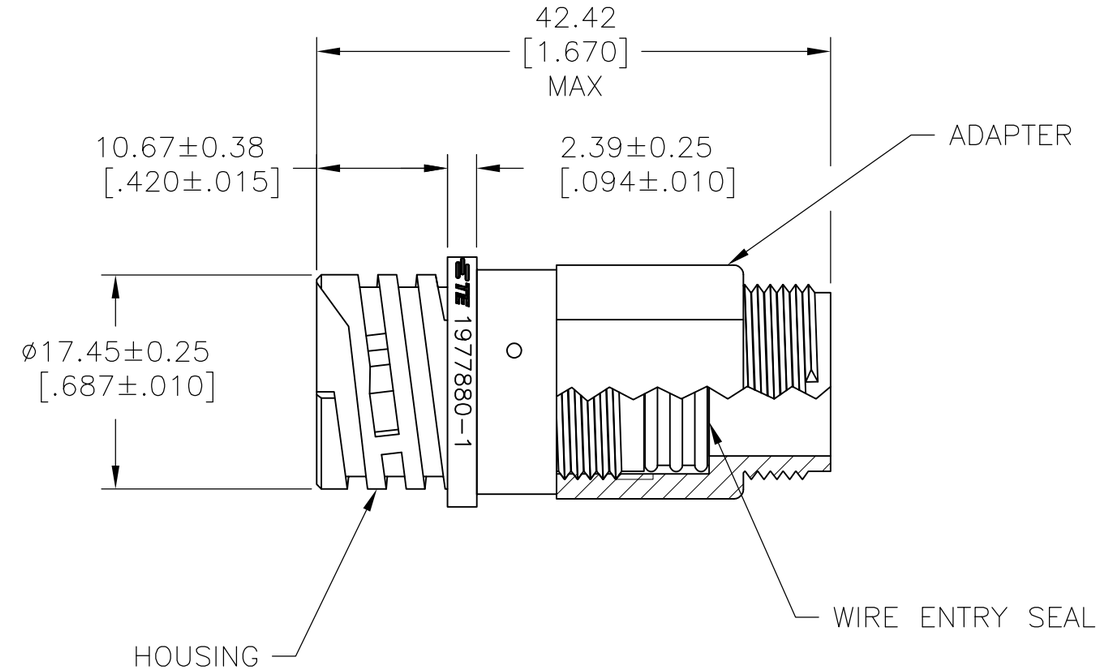

1977880-1

PART NUMBER

THIS DRAWING IS A CONTROLLED DOCUMENT.

DIMENSIONS: MILLIMETERS [INCHES]

TOLERANCES UNLESS OTHERWISE SPECIFIED:

0 PLC	± -
1 PLC	± -
2 PLC	± 0.13 [.005]
3 PLC	± -
4 PLC	± -
ANGLES	± -

MATERIAL: 1

FINISH: -

DWN	KIRAN HOLAL	08NOV12
CHK	M ZITTO	08NOV12
APVD	M ZITTO	08NOV12
PRODUCT SPEC	108-1579	
APPLICATION SPEC	114-10038	
WEIGHT	-	

TE Connectivity

NAME: CPC FREE HANGING RECEPTACLE ASSEMBLY, SERIES 1, SEALED, 11-4, REVERSE SEX, UV RESISTANT

SIZE	CAGE CODE	DRAWING NO	RESTRICTED TO
A3	00779	C-1977880	-

CUSTOMER DRAWING

SCALE	SHEET	REV
2:1	1 OF 1	A