Alle Rechte vorbehalten/ *All rights reserved*

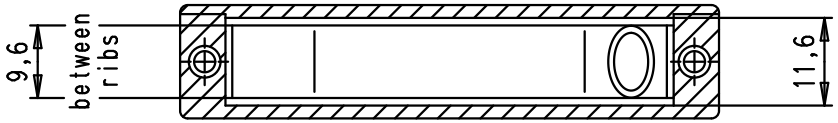


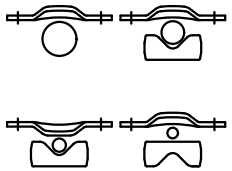

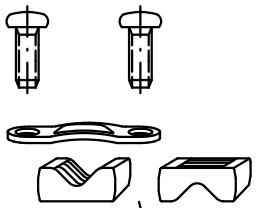

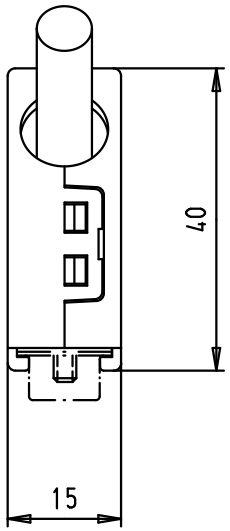


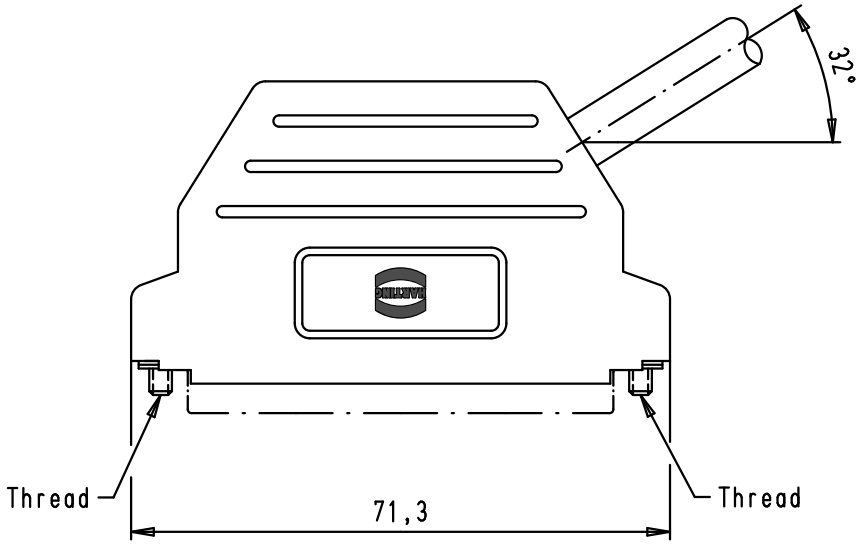


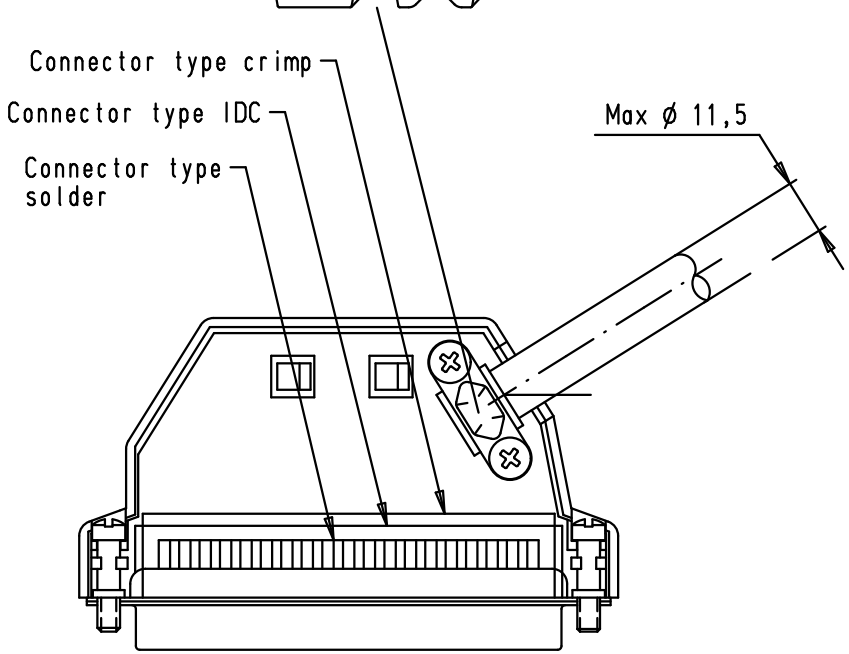


| | |
|---|---|
| 09 67 037 0463 | 4-40 UNC |
| 09 67 037 0462 | M3 |
| Part number | Thread |

| | | | | Dat. | Name |
|---|---|---|---|---|---|
| | | | Detail. | 03/03/11 | SC |
| | | | Insp. | 03/03/11 | JB |
| | | | Stand. | | |
| EC02948 | | | | | |
| Mod. | Dat. | Name | | | |

All Dim. in mm
Orig. Size DIN A 4

HARTING EURL
F-95972 Paris

D-Sub, 37 poles, black plastic, top/side entry, short screws

Maßstab/ *Scale* 1:1

TB 09 67 037 046X

Sub.

Blatt/ *Page* 1/2