VICOR CONFIDENTIAL

THIS DOCUMENT AND THE DATA DISCLOSED HEREIN OR HEREWITH IS NOT TO BE REPRODUCED, USED OR DISCLOSED IN WHOLE OR IN PART TO ANYONE WITHOUT THE PERMISSION OF VICOR CORP.

REVISIONS

REV	DESCRIPTION		DATE	APPROVED
1	RELEASED PER E064258	PEI	01/25/06	MH
2	REVISED PER E101188	KUK	09/24/10	AR

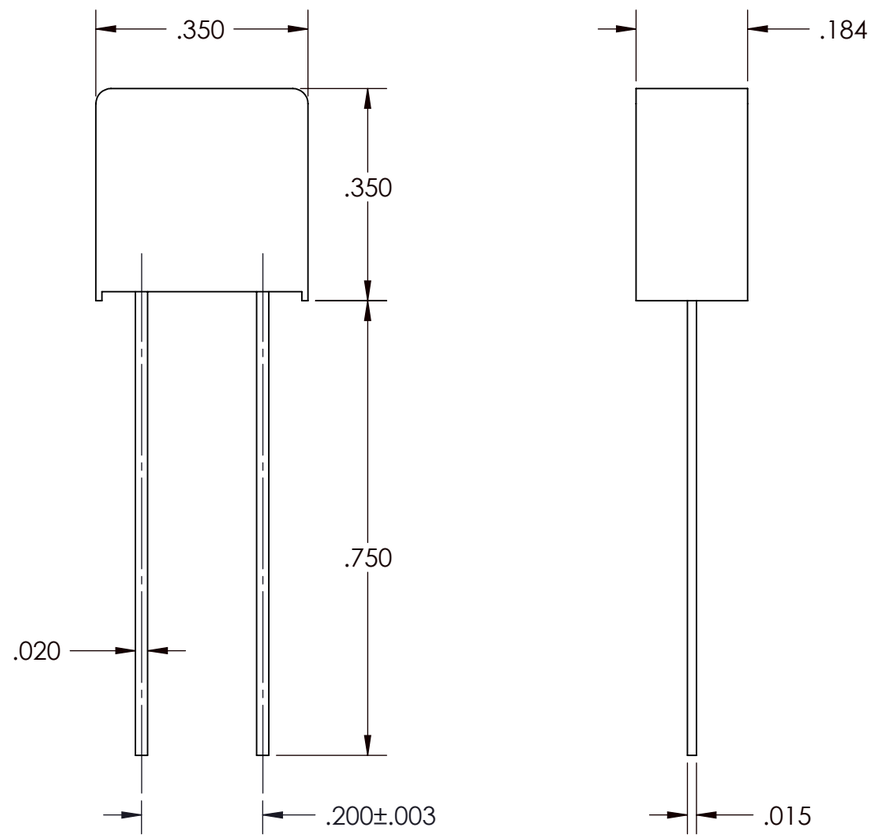

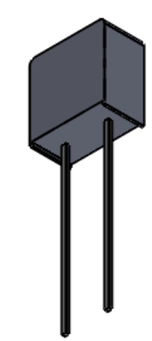

NOTES:
1. RoHS COMPLIANT, LEAD FREE PER CST-0001 LATEST REVISION.
2. UL RECOGNIZED FILE E19180, GUIDE JDYX2; CSA CERTIFIED FILE 42731, CLASS 1421-01

ELECTRICAL SPECIFICATIONS

AMPERAGE	3 AMPS
VOLTAGE	250 VOLTS
INTERRUPTING & VOLTAGE RATINGS	50 AMPS
TIME- CURRENT CHARACTERISTICS	CARRY 100% FOR 4 HRS MIN. OPEN AT 200% IN 10 SEC MAX.
COLD RESISTANCE DATA	0.071 W

DRAWN	DATE
P.E.IENI	08/02/05

MATERIAL

FINISH

UNLESS OTHERWISE SPECIFIED DIMENSIONS ARE INCH [MM]
TOLERANCES ARE:
DECIMALS ANGLES
X.XX [X.X] = ±0.01 [0.25] ±1°
X.XXX [X.XX] = ±0.005 [0.127]

THIRD ANGLE PROJECTION

DO NOT SCALE DRAWING

VICOR

SWD

FUSE 3A
250V LEADED

SIZE	CAGE CODE	DWG NO	REV
B	67131	30243	2

SCALE 4: 1

SHEET 1 OF 1