THIS DRAWING IS UNPUBLISHED. RELEASED FOR PUBLICATION 2008
© COPYRIGHT 2008 BY TYCO ELECTRONICS CORPORATION. ALL RIGHTS RESERVED.

LOC	DIST
A1	-

REVISIONS

P	LTR	DESCRIPTION	DATE	DWN	APVD
	A	NEW DRAWING	08FEB2011	HMR	MS

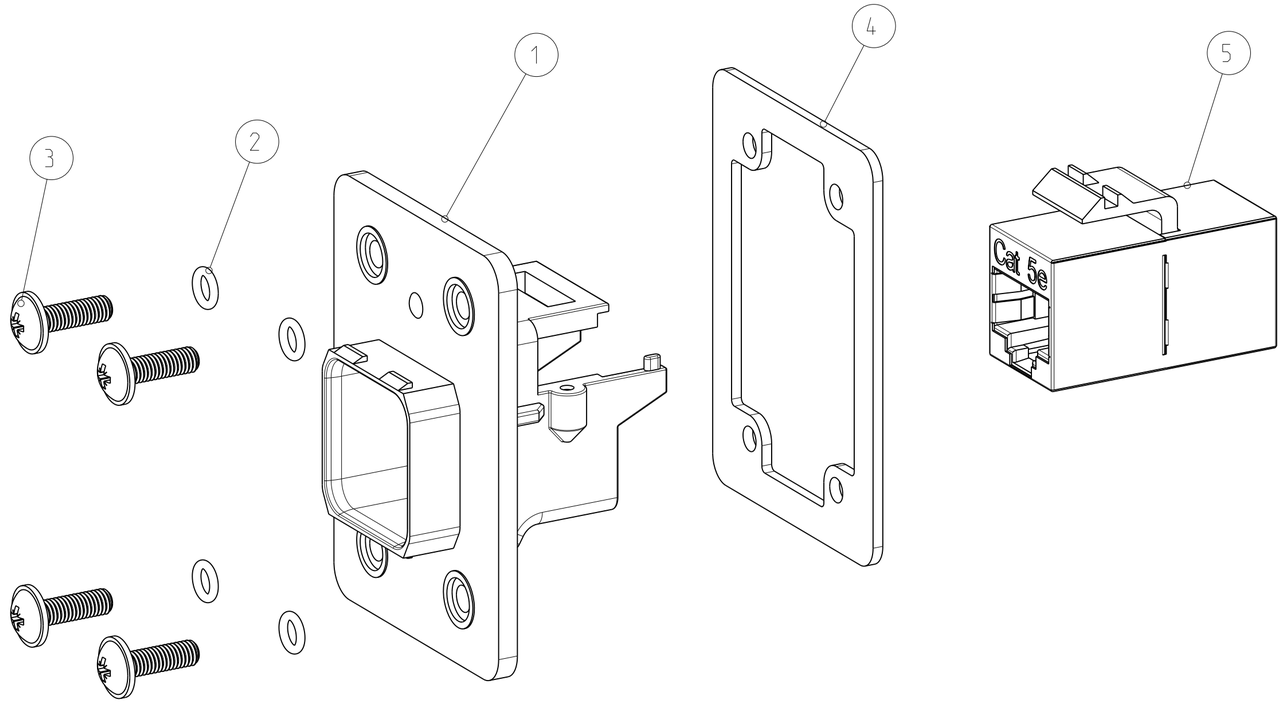

SINGLE PACKING: PLASTIC BAG (MINI GRIP) WITH MANUAL.
MULTI PACKING: 50 PIECE ITEM NO. 1 IN CORD TENSIONING BAG+
200 PIECE ITEM NO. 2 IN PLASTIC BAG (MINI GRIP) +
200 PIECE ITEM NO. 3 PLASTIC BAG (MINI GRIP) +
50 PIECE ITEM NO. 4 PLASTIC BAG (MINI GRIP) +
50 PIECE ITEM NO. 5 FOLDING BOX +
PACKED IN CORRUGATED SHIPPING BOX WITH MANUAL.

EINZELVERPACKUNG: KUNSTOFFBEUTEL (MINI GRIP) MIT ANLEITUNG.
MEHRFACHVERPACKUNG: 50 STUECK POS. 1 IN KORDELZUG BEUTEL +
200 STUECK POS. 2 IN KUNSTSTOFFBEUTEL (MINI GRIP) +
200 STUECK POS. 3 IN KUNSTSTOFFBEUTEL (MINI GRIP) +
50 STUECK POS. 4 IN KUNSTSTOFFBEUTEL (MINI GRIP) +
50 STUECK POS. 5 IN FALTSCHACHTEL +
VERPACKT IN VERSANDKARTON MIT ANLEITUNG.

CUT OUT FOR FITTING REQUIREMENT
AUSSCHNITT FUER EINBAU BEDINGUNG

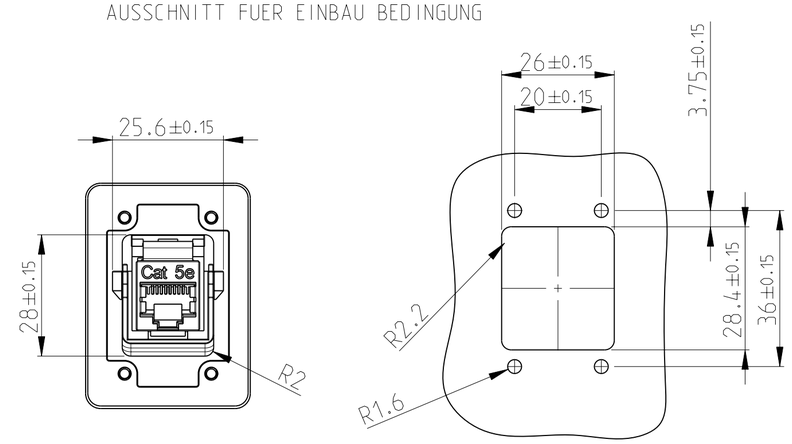

SCALE 1:1 / M 1:1 SCALE 1:1 / M 1:1

-	-	1	1	-	-	MANUAL	6
-	-	50	1	-	-	COUPLER,SL,INLINE,CAT5E,SHIELDED	5
-	-	50	1	-	-	FLAT GASKET FOR IP67 PUSH-PULL FRAME	4
-	-	200	4	-	-	ROUND HEAD SCREW Mx3	3
-	-	200	4	-	-	O-RING SEAL FOR IP67 PUSH-PULL FRAME	2
-	-	50	1	-	-	FRAME, PUSH-PULL, IP67	1
-	-	-2	-1	DWG. SIZE	PARTNUMBER	DESCRIPTION	ITEM NO
-	-	-	-	←	REVISION OF EACH ASSY NO. (WHEN BLANK. USE DWG. REVISION)		
QTY REQD PER ASSY					PARTS LIST		

THIS DRAWING IS A CONTROLLED DOCUMENT FOR TYCO ELECTRONICS CORPORATION. IT IS SUBJECT TO CHANGE AND THE CONTROLLING ENGINEERING ORGANIZATION SHOULD BE CONTACTED FOR THE LATEST REVISION.

DIMENSIONS: mm

TOLERANCES UNLESS OTHERWISE SPECIFIED:
0 PLC ±-
1 PLC ±-
2 PLC ±-
3 PLC ±-
4 PLC ±-
ANGLES ±1°

MATERIAL -
FINISH -

DWN 08FEB2011 RAGHAVENDRA
CHK 08FEB2011 SARVER MICHAEL
APVD 08FEB2011 SARVER MICHAEL
PRODUCT SPEC 108-94207
APPLICATION SPEC -
WEIGHT -

Tyco Electronics
Tyco Electronics AMP GmbH
64625 Bensheim (Germany)

NAME
ASSY, IP65/67 CAT5 PUSH-PULL FRAME
ASSY, IP65/67 CAT5 PUSH-PULL RAHMEN

SIZE	CAGE CODE	DRAWING NO	RESTRICTED TO
A2	00779	C-2172020	-

CUSTOMER DRAWING | SCALE 2:1 | SHEET 1 OF 1 | REV A

AMP 1471-9 REV 31MAR2000

Pro/ENGINEER DRAWING