© N/A TE Connectivity. All Rights Reserved.

REVISIONS					
P	LTR	DESCRIPTION	DATE	DWN	APVD
	AA	REV PER ECO-21-001917	27DEC2021	JAB	RL

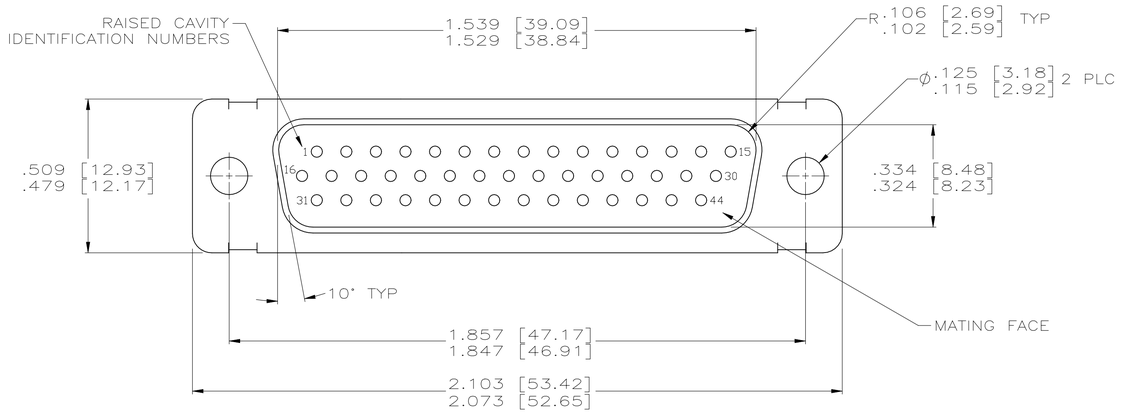

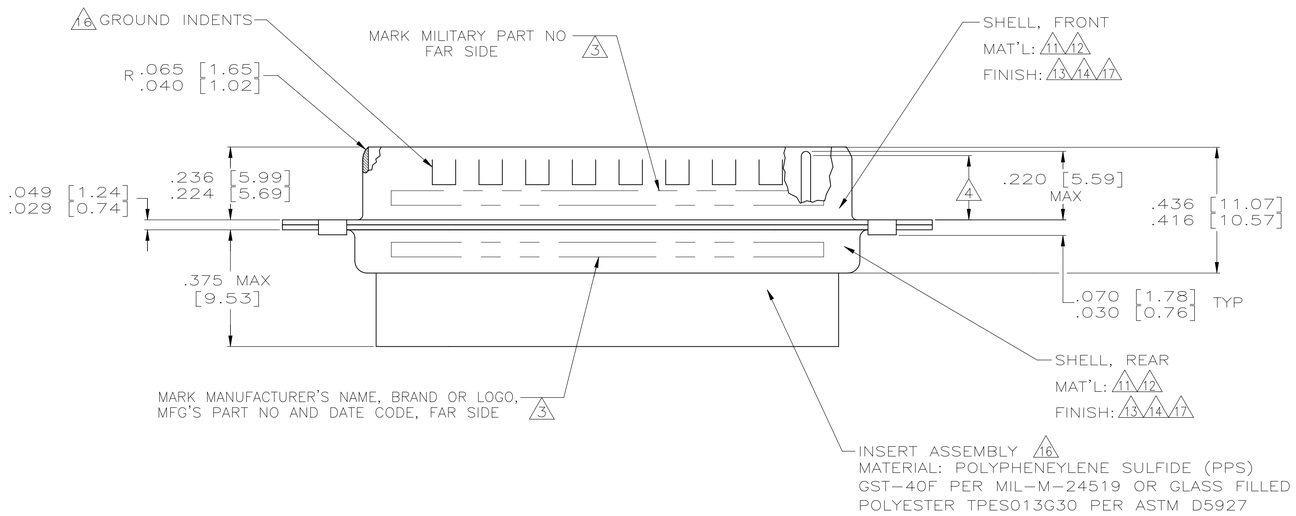

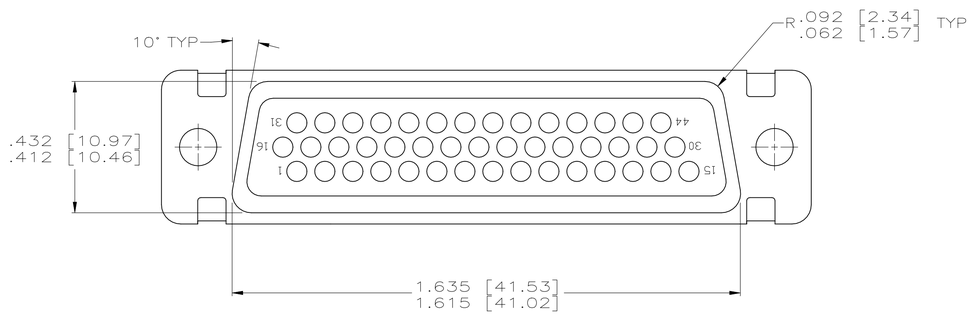

1. THIS CONNECTOR ASSEMBLY IS SUPPLIED WITH METAL CONTACT RETENTION CLIPS INSTALLED IN THE INSERT ASSEMBLY.

2. THIS CONNECTOR ASSEMBLY MEETS THE REQUIREMENTS OF MIL-C-24308 AND MATES WITH ANY RECEPTACLE CONNECTOR WITH THE SAME INSERT ARRANGEMENT.

3. THE PART NUMBER MARKED ON THE CONNECTOR MAY DIFFER FROM THE PART NUMBER ORDERED DUE TO THE MARKING REQUIREMENTS OF MIL-C-24308 (PART NUMBER MARKED ON CONNECTOR REPRESENTS CONNECTOR ASSEMBLY WITH CONTACTS).
MARK WITH .047 [1.19]-.062 [1.57] HIGH CHARACTERS.
FAR SIDE REFERS TO THE WIDE SIDE OF THE KEYSTONE.

4. FULL PIN DIAMETER EXTENSION IS .155 [3.94] MIN.
CONTACT NOT INCLUDED - SHOWN FOR DIMENSIONAL REFERENCE ONLY.

5. THIS CONNECTOR ASSEMBLY IS DESIGNED TO ACCEPT SIZE 22 CRIMP TYPE PIN CONTACT MILITARY PART NUMBER M39029/58-360 (TE PART NUMBER 204370-2). FOR ALTERNATE CONTACT OPTIONS CONSULT TE CATALOG.

6. MAXIMUM WIRE INSULATION TO BE USED WITH THIS CONNECTOR ASSEMBLY IS .054 [1.37] DIAMETER.

7. FOR CONTACT CRIMPING INSTRUCTION SHEET REFER TO TE IS 7516.
FOR CONTACT INSTALLATION AND REMOVAL INSTRUCTION SHEET REFER TO TE IS 7508.

8. PART NUMBER FOR ORDERING.

9. DIMENSIONS AND TOLERANCES PER ANSI Y14.5M-1982.

10. THIS DRAWING SHALL BE INTERPRETED IN ACCORDANCE WITH APPLICABLE STANDARDS LISTED IN MIL-STD-100.

11. MATERIAL: BRASS ALLOY PER ASTM B 36.

12. MATERIAL: STEEL PER ASTM-A-109 OR EQUIVALENT.

13. FINISH: CADMIUM PER QQ-P-416, TYPE II, CLASS 2 OVER COPPER PER AMS2418, CLASS 4.

14. FINISH: TIN PER ASTM-B-545, .000200 MIN THICK OVER .000050 TO .000200 COPPER PER AMS2418.

15. INSERT MATERIAL FOR 204505-3: PHENOLIC COLOR: BLACK.

16. FRONT SHELL HAS GROUND INDENTS ON 204505-4 & -5 ONLY.

17. FINISH: BRIGHT TIN PER ASTM-B-545, .000400-.000550 THK OVER COPPER PER AMS2418, .000050 MIN THK.

JURISDICTION	EAR
CLASSIFICATION	EAR99
DATE OF MARKING	27DEC2021
THIS DOCUMENT CONTAINS CONTROLLED TECHNICAL DATA SUBJECT TO THE EXPORT ADMINISTRATION REGULATIONS (EAR). VIOLATIONS OF THESE EXPORT LAWS AND REGULATIONS ARE SUBJECT TO CIVIL AND CRIMINAL PENALTIES.	

	REMARKS	INSERT ARRANGEMENT	NO OF POS	SHELL SIZE	PACKAGE MILITARY P/N 8	MILITARY P/N ON CONNECTOR 3	TE P/N ON CONNECTOR 3	PART NUMBER 8
	12 17	MS18275-2	44	3	-----	-----	204505-6	204505-6
	12 17 16	MS18275-2	44	3	-----	-----	204505-5	204505-5
	12 14 16	MS18275-2	44	3	-----	-----	204505-4	204505-4
SUPSD. BY 204505-1	12 13	MS18275-2	44	3	-----	-----	204505-3	204505-3
SUPSD. BY 593064-3	11 13	MS18275-2	44	3	M24308/8-266F	M24308/8-13F	204517-5	204505-2
	12 13	MS18275-2	44	3	M24308/4-266F	M24308/4-13F	204517-2	204505-1

THIS DRAWING IS A CONTROLLED DOCUMENT.

DIMENSIONS: INCHES

TOLERANCES UNLESS OTHERWISE SPECIFIED:
0 PLC ± -
1 PLC ± -
2 PLC ± -
3 PLC ± .005
4 PLC ± -
ANGLES ± 1°

MATERIAL: SEE CALLOUTS
FINISH: SEE CALLOUTS

DWN AJ GRAFF 06JAN93
CHK B.GILLMAN 06JAN93
APVD F.KINSEY 06JAN93
PRODUCT SPEC MIL-C-24308
APPLICATION SPEC —
WEIGHT 0.000000
CUSTOMER DRAWING

TE Connectivity

NAME: AMPLIMITE PLUG ASSY SIZE 22D CRIMP TYPE PIN CONTACTS 90 SHELL SIZE 3 —

SIZE	CAGE CODE	DRAWING NO	RESTRICTED TO
A1	00779	C-204505	—

SCALE 4:1 SHEET 1 OF 1 REV AA

4805 (1/15)