Jan.1.2022 Copyright 2022 HIROSE ELECTRIC CO., LTD. All Rights Reserved.
In case of consideration for using Automotive equipment / device which demand high reliability, kindly contact our sales window correspondents.

	COUNT	DESCRIPTION OF REVISIONS	BY	CHKD	DATE		COUNT	DESCRIPTION OF REVISIONS	BY	CHKD	DATE
△					. .	△					. .
△					. .	△					. .
△					. .	△					. .

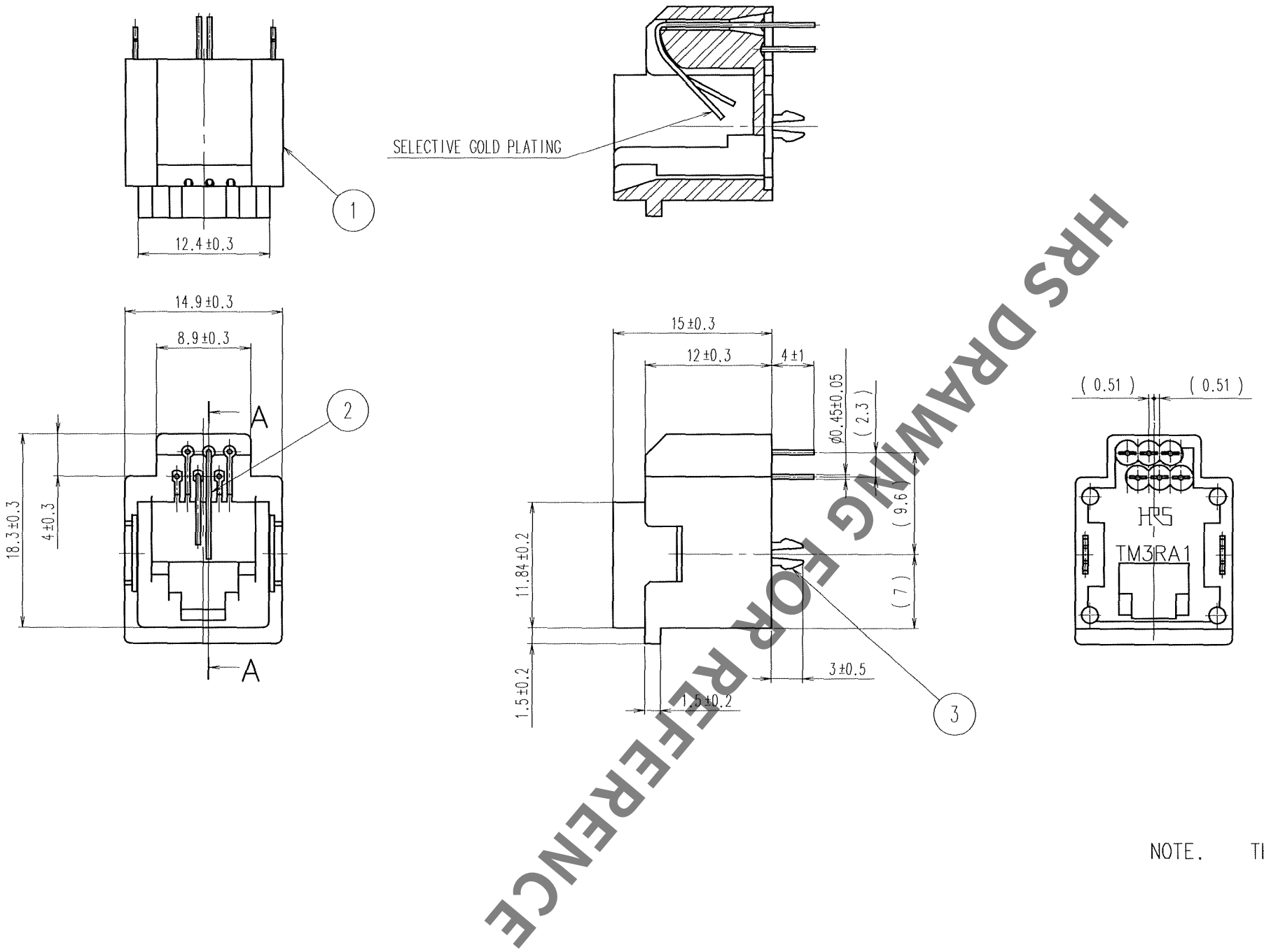

RECOMMENDED PC BOARD HOLE PATTERN (4:1)

(MOUNTING SIDE) t=1.6

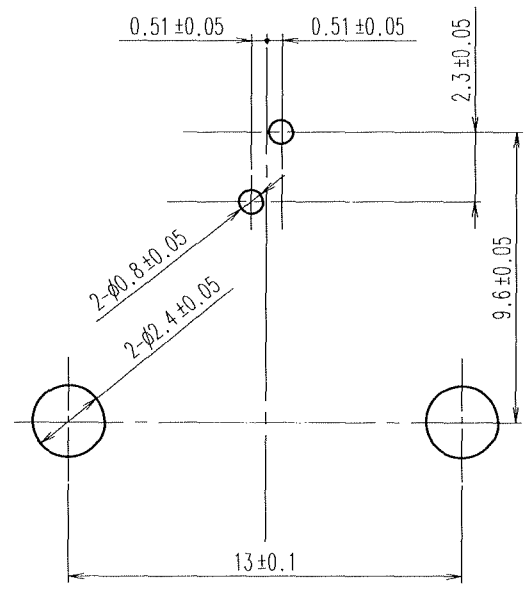

NOTE. THE DIMENSIONS IN PARENTHESES ARE FOR REFERENCE.

NO.	MATERIAL	FINISH, REMARKS	NO.	MATERIAL	FINISH, REMARKS
2	PHOSPHOR BRONZE	SELECTIVE GOLD PLATING 1.27μm			
1	PBT	UL94V-0 (BLACK)	3	PHOSPHOR BRONZE	TIN PLATING

CODE NO.(OLD)	DRAWN	DESIGNED	CHECKED	APPROVED	RELEASED
	S. Yamaya 03.11.21	S. Yamaya 03.11.21	T. Watanabe 03.11.21	H. Miwa 03.11.25	. .

SCALE 2 : 1	DRAWING NO. EDC3-025816-01	PART NO. TM3RA1-62(60)
UNITS mm	HRS HIROSE ELECTRIC CO., LTD	CODE NO. CL222-1375-2-60 1/1

TO
Q

FORM NO.229