Mallory Sonalert Products,Inc.	Part #: MSS5VMCSP
Sales Outline Drawing	Revision: **D**

Specifications:	**cUL Recognized to IEC60601-1-8 AMD1** **Ventilation Melody**			
Sound Level Category:	Silent	Loud	Loud	Loud
Mode of Operation:	Silent	Continuous	Medium Priority Alarm - 3 beeps repeating every 7.5 sec	Slow Pulse @ 1PPS
Loudness @ 10cm:	Silent	85 to 95 dB(A) Typ.	85 to 95 dB(A) Typ.	85 to 95 dB(A) Typ.
Frequency:	Silent	2500 ± 300Hz	150 to 4000 Hz	2500 ± 300Hz
Connection:	Connect " + " to " + " & " - " to " - " of Power Supply	Connect " + " to " + " & " - " & Low to " - " of Power Supply	Connect " + " to " + " & " - " & Medium to " - " of Power Supply	Connect " + " to " + " & " - " & High to " - " of Power Supply
Average Current Draw:	<20mA Typ.	<225mA Typ.	<70mA Typ.	<225mA Typ.
Voltage Rating:	5 ± 0.5 VDC			
Ipk Current*:	400mA			
Housing Material:	Valox (UL94V-0), Octagonal, Black			
Storage Temperature:	-30° to +60° C			
Operating Temperature:	-30° to +55° C			
Weight Typical:	6.0g			
Options:	Please contact factory.			

Dimensions: Inches [mm] **cUL Recognized** **ROHS Compliant**

PATENT NUMBER: 7880593

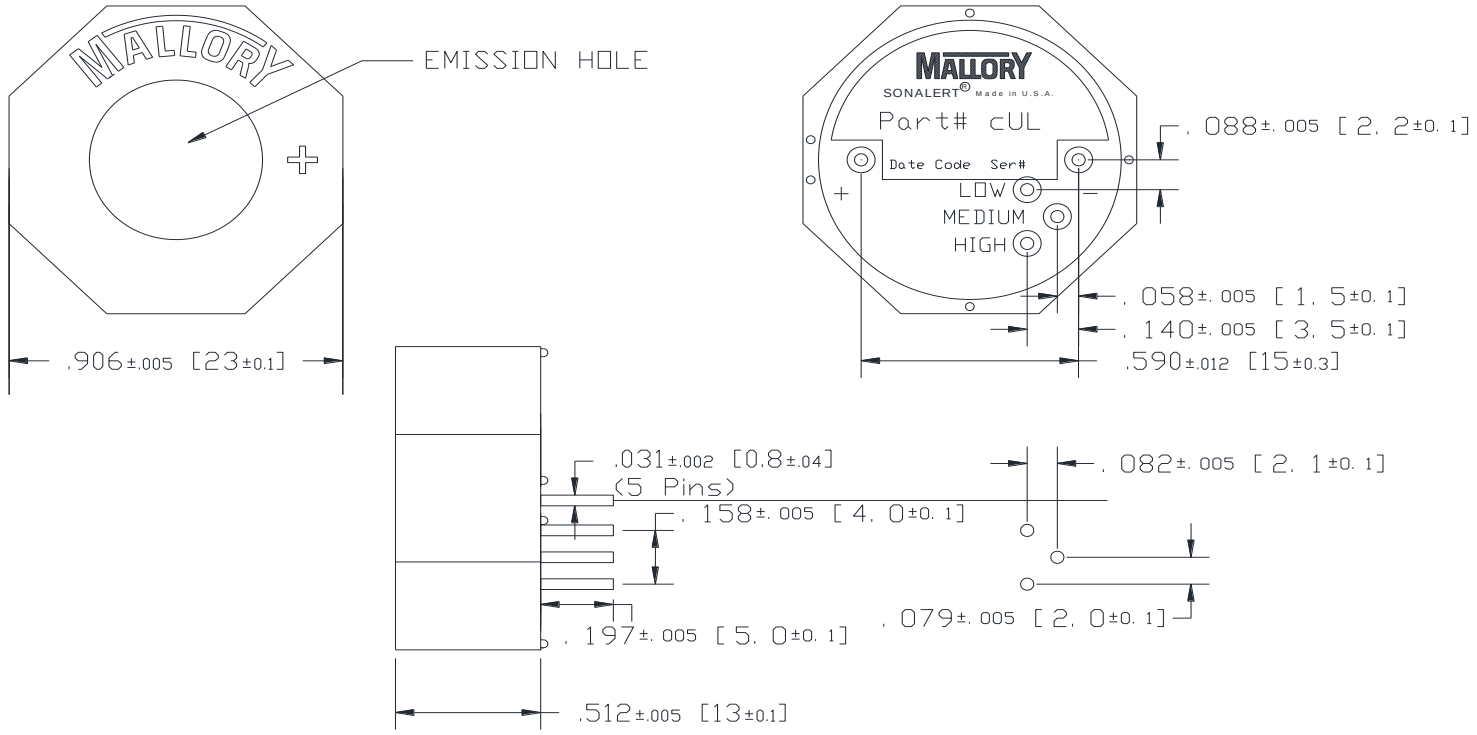

NOTE A:
TERMINALS - .031" DIA. NICKEL/TIN COATED BRASS.
NOTE B:
MOUNTING- INSERT INTO PRINTED CIRCUIT BOARD AND HAND OR MACHINE SOLDER.
UNITS ARE SUITABLE FOR WAVE SOLDERING. BOARDS ARE NOT SUITABLE FOR WASH.
RECOMMENDED MAXIMUM TEMPERATURE AND TIME DURATION FOR WAVE SOLDERING IS
+270°C AND 3 SECONDS RESPECTIVELY.

*Ipk = Instantaneous Peak

4411 South High School Road, Indianapolis, Indiana 46241 U.S.A · Phone: (317) 612-1000 Fax: (317) 612-1010 www.mspindy.com