版数 REV.	年月日 DATE	CN NO.	変更内容 DESCRIPTION	製図 DR.	担当 CHK.	査閲 APPD.	承認 APPD.
2	24/AUG/2011	000028	ADDED CRIMPED DIMENSION IN FRONT VIEW CHANGED REEL QTY	P. A. R.	T. MAEDA	-	T. KUME
3	29/SEP/2011	000424	CHANGED TITLE		T. MAEDA	-	T. KUME

図面番号(DRAWING NO.) SJ104491

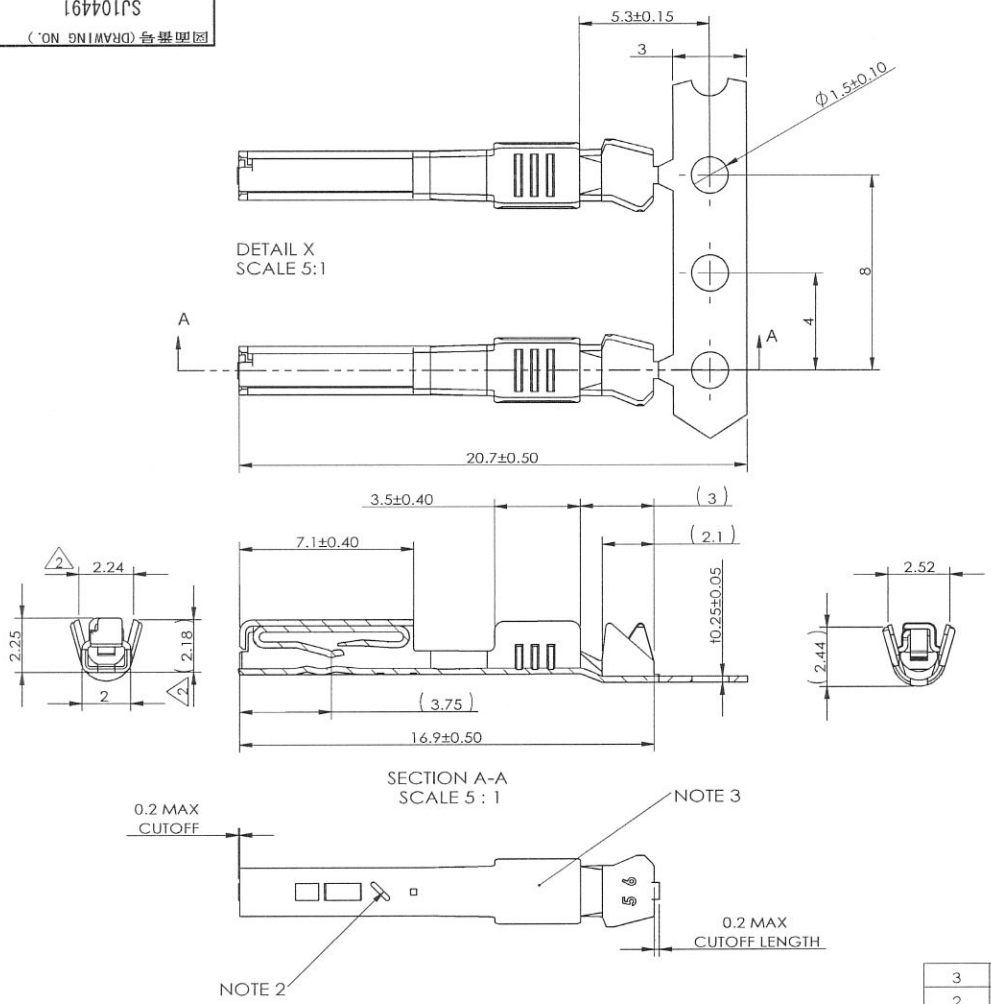

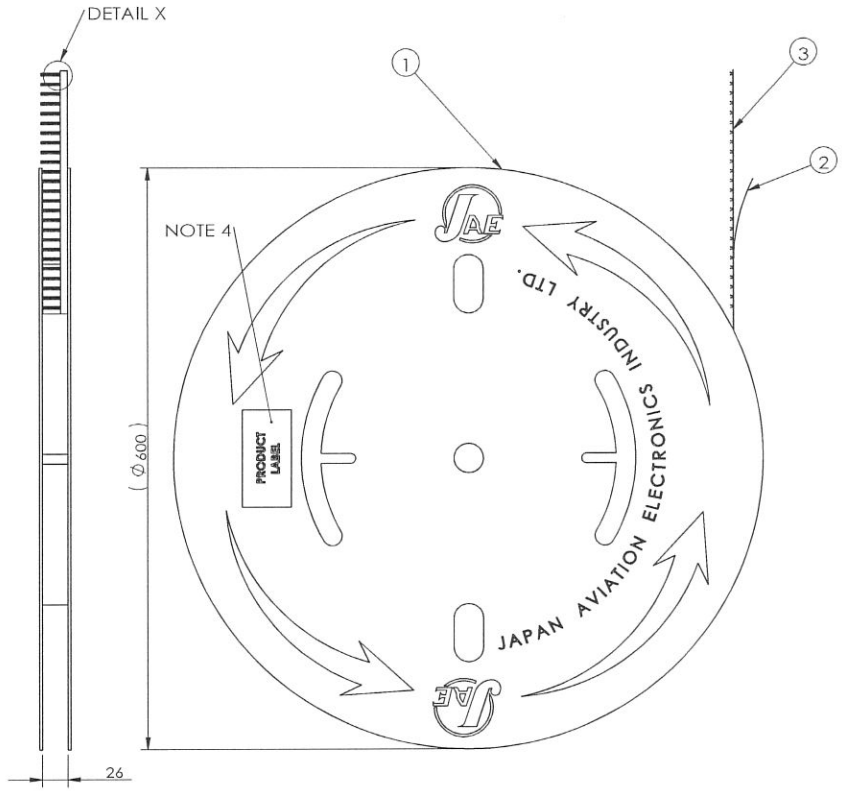

1) APPLICABLE WIRE SPECIFICATION:
   S97GG14401AA- FORD EUROPE WIRE STANDARD (WIRE SIZES 0.35-0.5mm, OVER 105°C).
   WSK-MIL124-A-ENGINEERING MATERIAL SPECIFICATION(WIRE SIZES 0.35-0.5mm, UP TO105°C)
2) INDICATES CONDUCTOR CRIMP WING SIZE (REFER TO JAHL-10289)
3) INDICATES LOT NUMBER
4) PRODUCT SHIPPING LABEL
5) TO BE USED IN USCAR TEMPERATURE CLASS 1, 2, & 3 ENVIRONMENTS.

符号 NO.	名称 DESCRIPTION	個数 QTY.	材料 MATERIAL	仕上 FINISH	備考 REMARKS
3	FEMALE CONTACT	7500/2	COPPER ALLOY	REFLOW TIN PLATED	
2	PAPER TAPE	1	PAPER		
1	SHIPPING REEL	1	PAPER		

仕様書(SPECIFICATION): JACS-10289, JAHL-10289

第1版(ORIGINAL DATE): 23/AUG/2005

製図 DR.: A. KENNEDY
担当 CHK.: T. KUME
査閲 APPD.: T. KUME
承認 APPD.: T. ISHIWA

尺度(SCALE): 1:5
シリーズ(SERIES): MX41
名称(TITLE): M41S75H1F2 (3)
質量(MASS):

一般公差(GENERAL TOLERANCE)

寸法(DIMENSION)		角度(ANGLES)
.	±0.50	×° ±
.×	±0.30	×°×' ±
.××	±0.15	
.×××	±	

日本航空電子工業株式会社
JAPAN AVIATION ELECTRONICS INDUSTRY,LTD.

図面番号(DRAWING NO.): SJ104491

SIZE A3
版数(REV.) 3

WISDOM承認 2011/09/30

RECEIVED
OCT 07 2011

COMPANY CONFIDENTIAL
PRINTED DRAWING IS UNCONTROLLED

DCF-C-212F(05.08)

S/W

JAE Connector DIV. Proprietary.
Copyright(C) 2005, Japan Aviation Electronics Industry, LTD.