Jan.1.2022 Copyright 2022 HIROSE ELECTRIC CO., LTD. All Rights Reserved.
In case of consideration for using Automotive equipment / device which demand high reliability, kindly contact our sales window correspondents.

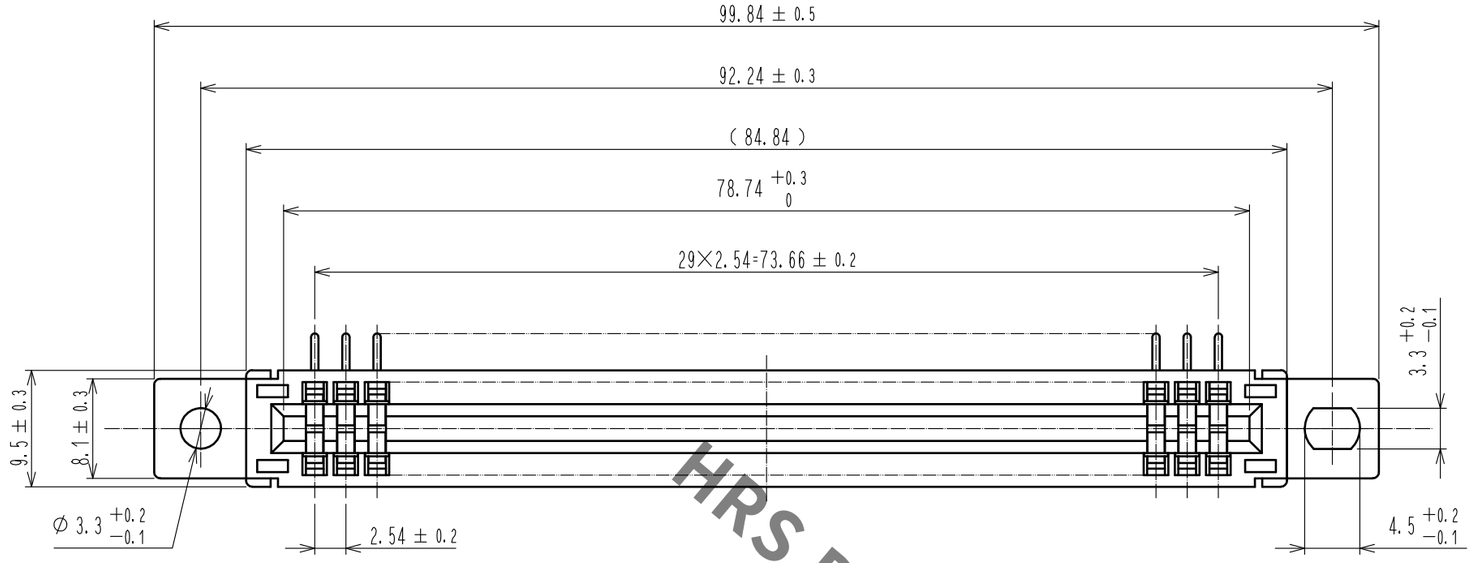

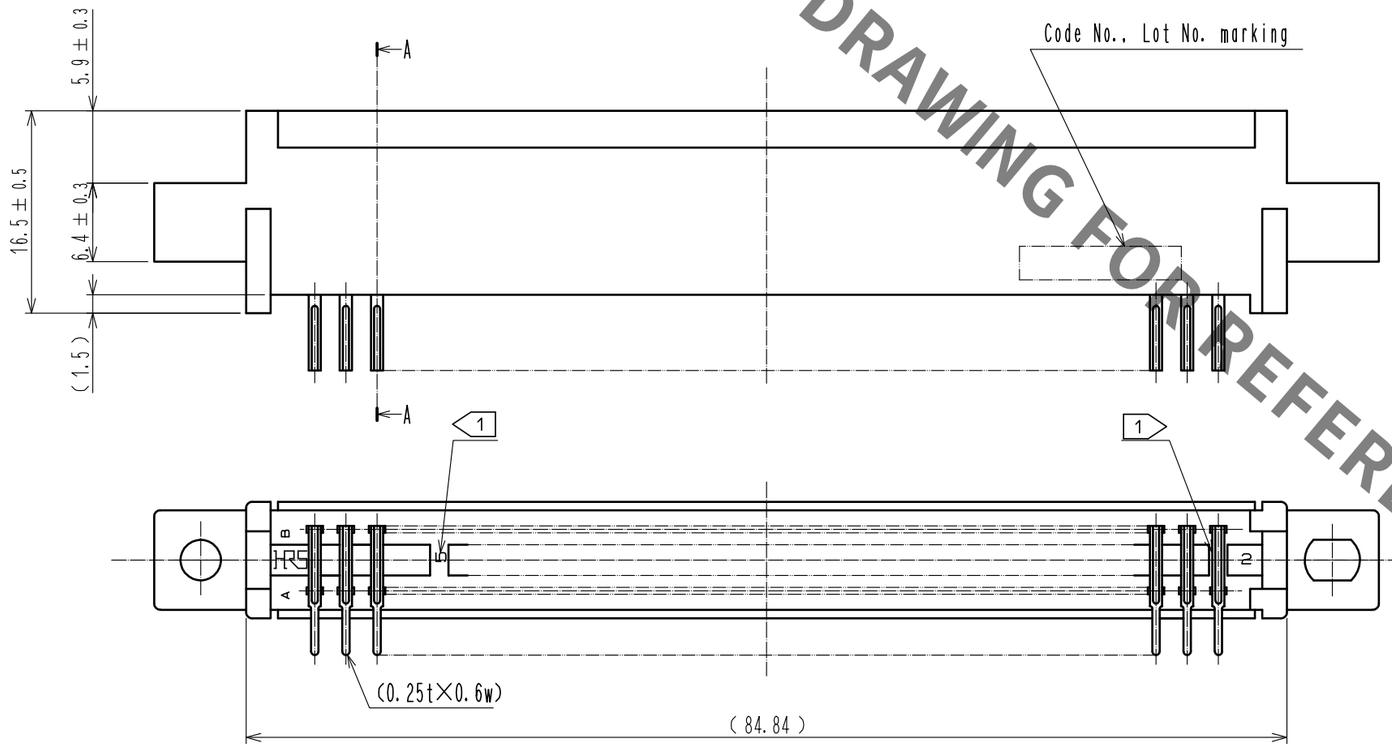

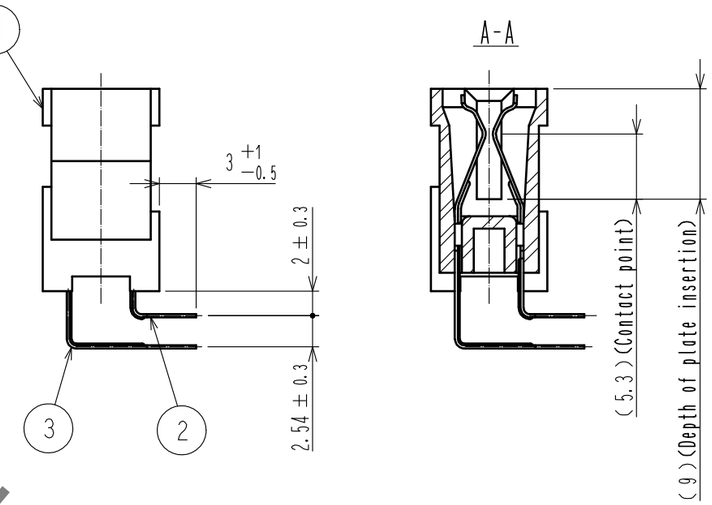

Notes 1 Contact No. (5, 10, 15, 20, 25, 30) are shown.
2 A polarizing key inserted between the following contact positions. (5 to 6), (10 to 11), (15 to 16), (20 to 21), (25 to 26).
3 The dimensions in parentheses are for reference.

Recommended PC board hole pattern (t=1.6±0.1)

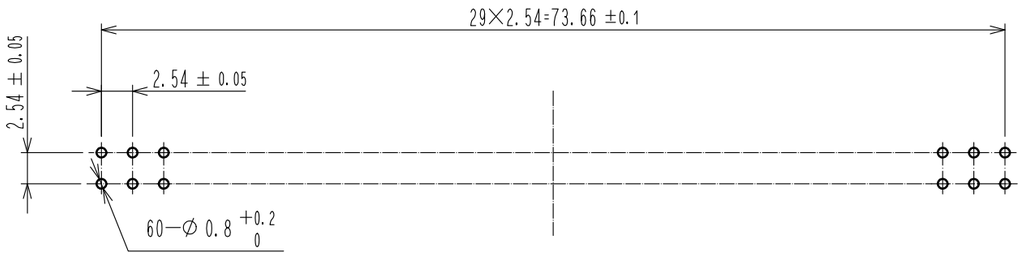

HRS DRAWING FOR REFERENCE

NO.	MATERIAL	FINISH . REMARKS	NO.	MATERIAL	FINISH . REMARKS
2	PHOSPHOR BRONZE	(Contact area)Ni2.5μm+Au0.05μm (Mounting area)Ni2.5μm+Sn2μm	3	PHOSPHOR BRONZE	(Contact area)Ni2.5μm+Au0.05μm (Mounting area)Ni2.5μm+Sn2μm
1	PBT	BLACK UL94V-0			

UNITS	SCALE	COUNT	DESCRIPTION OF REVISIONS	DESIGNED	CHECKED	DATE
mm	2 : 1	0				

HRS HIROSE ELECTRIC CO., LTD.

APPROVED	: HT. YAMAGUCHI	18. 06. 25	DRAWING NO.	EDC-018063-70-01
CHECKED	: HT. YAMAGUCHI	18. 06. 25	PART NO.	CR22-60D-2.54DSA(70)
DESIGNED	: TY. EDAGAWA	18. 06. 25	CODE NO.	CL522-0028-8-70
DRAWN	: MK. OOKI	18. 06. 21		0 1/1

FORM HC0011-5-7