THIS DRAWING IS UNPUBLISHED. RELEASED FOR PUBLICATION -,- .
© COPYRIGHT - By - ALL RIGHTS RESERVED.

LOC	DIST
FT	0

REVISIONS

P	LTR	DESCRIPTION	DATE	DWN	APVD
	F2	REVISED PER ECO-11-004820	11MAR11	RK	HMR

PHYSICAL PROPERTIES:
HOUSING MATERIAL: PBT
FLAMMABILITY: UL94V-0
COLOR: BLACK

TERMINAL:
TERMINALS: BRASS, TIN PLATED
SCREWS: 8-32 STEEL, NICKEL PLATED

MECHANICAL:
PITCH (TERMINAL SPACING): .563"
WIRE RANGE: 10-22 AWG
RECOMMENDED TIGHTENING TORQUE: 14IN-LBS MAX.

ELECTRICAL PROPERTIES:
MAXIMUM CURRENT: 30A
OPERATING VOLTAGE: 300V

ENVIRONMENTAL PROPERTIES:
OPERATING TEMP RANGE: -40°C TO 120°C

1. PARTS SUPPLIED WITH SCREWS UNINSTALLED.
2. PRELIMINARY PART NUMBER.
3. TE CONNECTIVITY LOGO LOCATED APPROXIMATE AREA SHOWN.

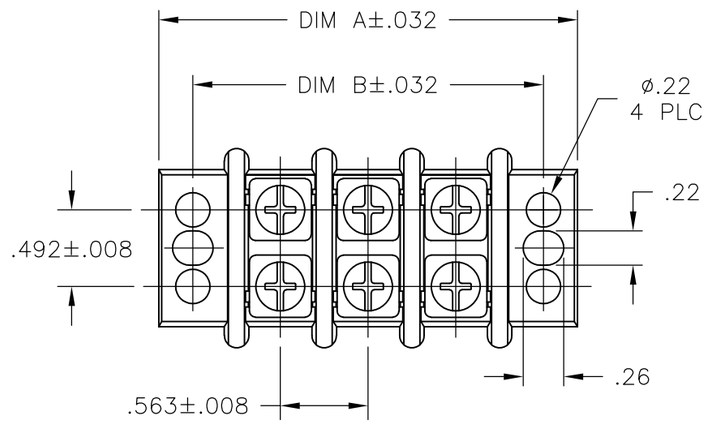

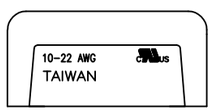

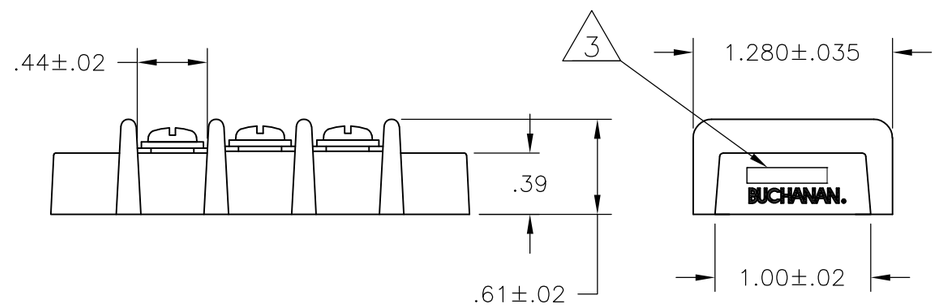

	DIM B	DIM A	NO. OF POSN	BUCHANAN PART NO.
	10.701	11.138	18	1-1546311-8
	10.138	10.575	17	1-1546311-7
	9.575	10.012	16	1-1546311-6
	9.012	9.449	15	1-1546311-5
	8.449	8.886	14	1-1546311-4
	7.886	8.323	13	1-1546311-3
	7.323	7.760	12	1-1546311-2
	6.760	7.197	11	1-1546311-1
	6.197	6.634	10	1-1546311-0
2 1	5.634	6.071	9	2-1546311-1
	5.634	6.071	9	1546311-9
2 1	5.071	5.508	8	2-1546311-0
	5.071	5.508	8	1546311-8
	4.508	4.945	7	1546311-7
	3.945	4.382	6	1546311-6
	3.382	3.819	5	1546311-5
2 1	2.819	3.256	4	1-1546311-9
	2.819	3.256	4	1546311-4
	2.256	2.693	3	1546311-3
	1.693	2.130	2	1546311-2

THIS DRAWING IS A CONTROLLED DOCUMENT.

DIMENSIONS: INCHES

TOLERANCES UNLESS OTHERWISE SPECIFIED:
0 PLC ± -
1 PLC ± -
2 PLC ± .01
3 PLC ± .005
4 PLC ± -
ANGLES ± -

MATERIAL -
FINISH -

DWN S SCHLEGEL 20AUG2002
CHK C RICHARD 8/20/02
APVD C RICHARD 8/20/02
PRODUCT SPEC —
APPLICATION SPEC —
WEIGHT —

TE Connectivity

NAME .563 DBL ROW BARRIER STRIP W/ WASHER —

SIZE	CAGE CODE	DRAWING NO	RESTRICTED TO
A3	00779	C-1546311	—

CUSTOMER DRAWING | SCALE NTS | SHEET 1 OF 1 | REV F2