OPERATING CHARACTERISTICS AT 25° C AMBIENT													
DIALIGHT PART NUMBER	COLOR	LUMINOUS INTENSITY @I_F = 20 mA (mcd)			FORWARD VOLTAGE @I_F = 20 mA (V)			REVERSE CURRENT (μA)	DOMINANT WAVELENGTH (nm)			PEAK WAVELENGTH (nm)	VIEWING ANGLE (DEG)
		MIN	TYP	MAX	MIN	TYP	MAX	MAX	MIN	TYP	MAX	TYP	TYP
597-6001-602F,-607F	RED	18.0		280.0		2.0	2.4	10		631		639	70
597-6201-602F,-607F	ORANGE	71.0		450.0		2.0	2.4	10		605		611	
597-6301-602F,-607F	GREEN	280.0		1120.0	2.8		3.8	100		525		530	
597-6401-602F,-607F	YELLOW	28.0		450.0		2.0	2.4	10		587		588	
597-6501-602F,-607F	YELLOW-GREEN	28.0		180.0	1.8		2.4	10	567.5		576.5	574	
597-6601-602F,-607F	BLUE	112.0		280.0		3.0	3.8	100	465		475	468	

REV	ECN NO	REVISIONS	DRN	CKD	APP	DATE
A	———	NEW RELEASE	KLJ	N.O.	MES	2/28/08
B	———	UPDATED LED SPECS FOR 597-6301-602F,-607F & 597-6601-602F,-607F;ADDED BIN V	WFB	JTD	N.O.	10/3/14
C	—	UPDATED RECOMMENDED RoHS SOLDER PROFILE	BP	—	NO	3-29-17

ABSOLUTE MAXIMUM RATINGS AT 25° C AMBIENT	COLOR						UNITS
	RED	ORANGE	YELLOW	YELLOW-GREEN	GREEN	BLUE	
POWER DISSIPATION	75				76		mW
DC FORWARD CURRENT	30				20		mA
PEAK FORWARD CURRENT (1/10 DUTY CYCLE, 0.1 ms PULSE)	80				100		mA
DERATE LINEARLY FROM 25° C	0.4				0.25		mA/° C
REVERSE VOLTAGE	5						V
STORAGE TEMPERATURE	-55 TO +85						°C
OPERATING TEMPERATURE	-55 TO +85						°C
SOLDERING TEMPERATURE, FOR 5 SEC	260						°C

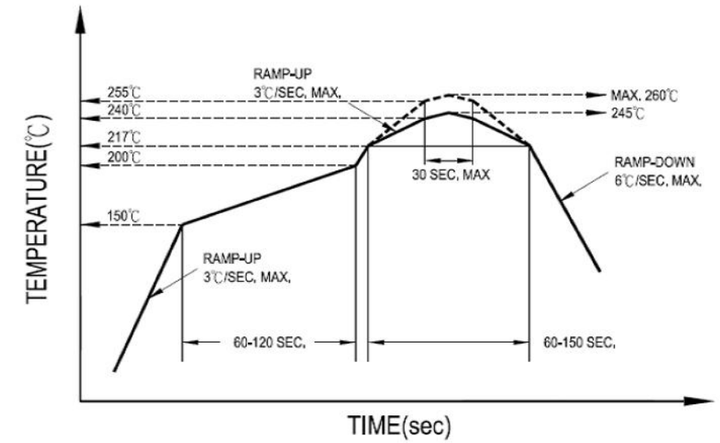

RECOMMENDED SOLDER PAD LAYOUT

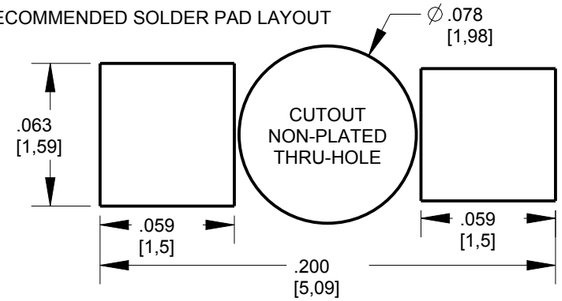

LUMINOUS INTENSITY (mcd) @20mA		
BIN CODE	MIN	MAX
M	18.0	28.0
N	28.0	45.0
P	45.0	71.0
Q	71.0	112.0
R	112.0	180.0
S	180.0	280.0
T	280.0	450.0
U	450.0	710.0
V	710.0	1120.0
TOLERANCE ON EACH IV BIN IS ±15%		

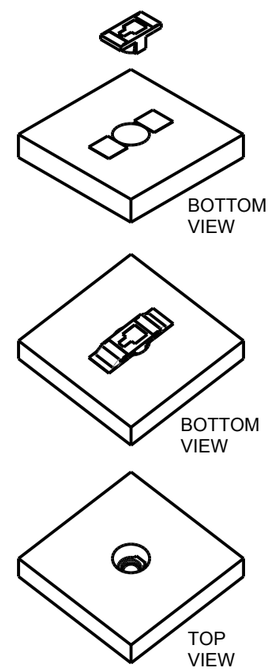

RECOMMENDED RoHS SOLDER PROFILE

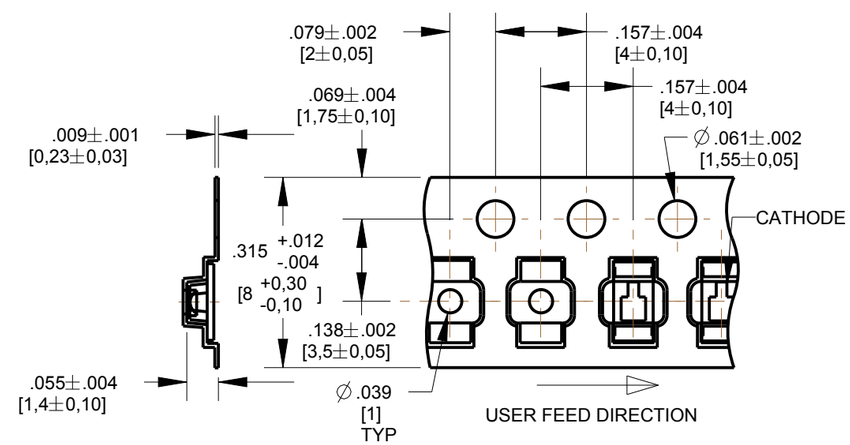

PACKAGE DIMENSIONS OF TAPE AND REEL

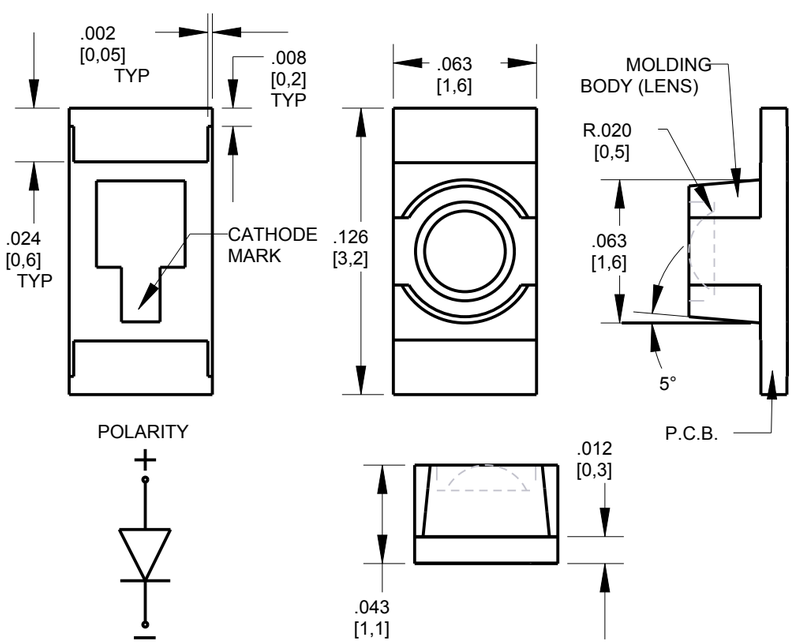

ATTENTION:
OBSERVE PRECAUTIONS FOR HANDLING ELECTROSTATIC SENSITIVE DEVICES

NOTES:
1. LENS: WATER CLEAR
2. LED CHIP: AlInGaP (RED, ORANGE, YELLOW, YELLOW-GREEN)
   InGaN (GREEN, BLUE)
3. LEADS ARE GOLD (Au) PLATED FINISH.
4. PACKAGING: -602F SUFFIX MEANS 20 PCS SAMPLE STRIP
   -607F SUFFIX MEANS 3000 PARTS/REEL, 7 INCH (180mm) DIA. REEL.
5. DIALIGHT PART NUMBERS: 597-6001-602F, -607F; 597-6201-602F, -607F; 597-6301-602F, -607F; 597-6401-602F, -607F; 597-6501-602F, -607F; 597-6601-602F, -607F.
6. THIS ASSEMBLY CONTAINS ELECTROSTATIC DISCHARGE SENSITIVE DEVICES (ESDS). MAINTAIN ALL PRECAUTIONARY MEASURES DURING ASSEMBLY, HANDLING, AND STORAGE IN ACCORDANCE WITH IPC-A-610.
7. MOISTURE SENSITIVITY LEVEL 3.
8. TAPE AND REEL LEDS MAY REQUIRE RE-TAPING AFTER TWELVE MONTHS.

THIS DRAWING AND THE CONTENTS HEREIN ARE CONFIDENTIAL AND THE SOLE PROPERTY OF DIALIGHT CORP. REPRODUCTION OF THIS DRAWING OR CONSTRUCTION OF ANY PARTS WITHIN THIS DRAWING ARE FORBIDDEN WITHOUT THE WRITTEN CONSENT OF DIALIGHT CORP.

SCALE: 15.000
ALL DIM's: INCH (mm)
TOLERANCES: UNLESS OTHERWISE SPECIFIED
FRACTIONS: ±1/64
DECIMALS (.XX): ±.01
DECIMALS (.XXX): ±.005
DECIMALS (.XXXX): ±.0005
ANGLES: ±1°
FINISH: -
FSCM 83330

DRAWING NUMBER: C-17596
REV: C
TITLE: 3.2mm x 1.6mm x 1.1mm REVERSE MOUNT LED; RoHS COMPLIANT
MATERIAL: -

Dialight
1501 ROUTE 34 SOUTH
FARMINGDALE, NJ 07727
(732) 919-3119
www.dialight.com

SHEET 1 OF 1
FAMILY TABLE: