Alle Rechte vorbehalten/ *All rights reserved*

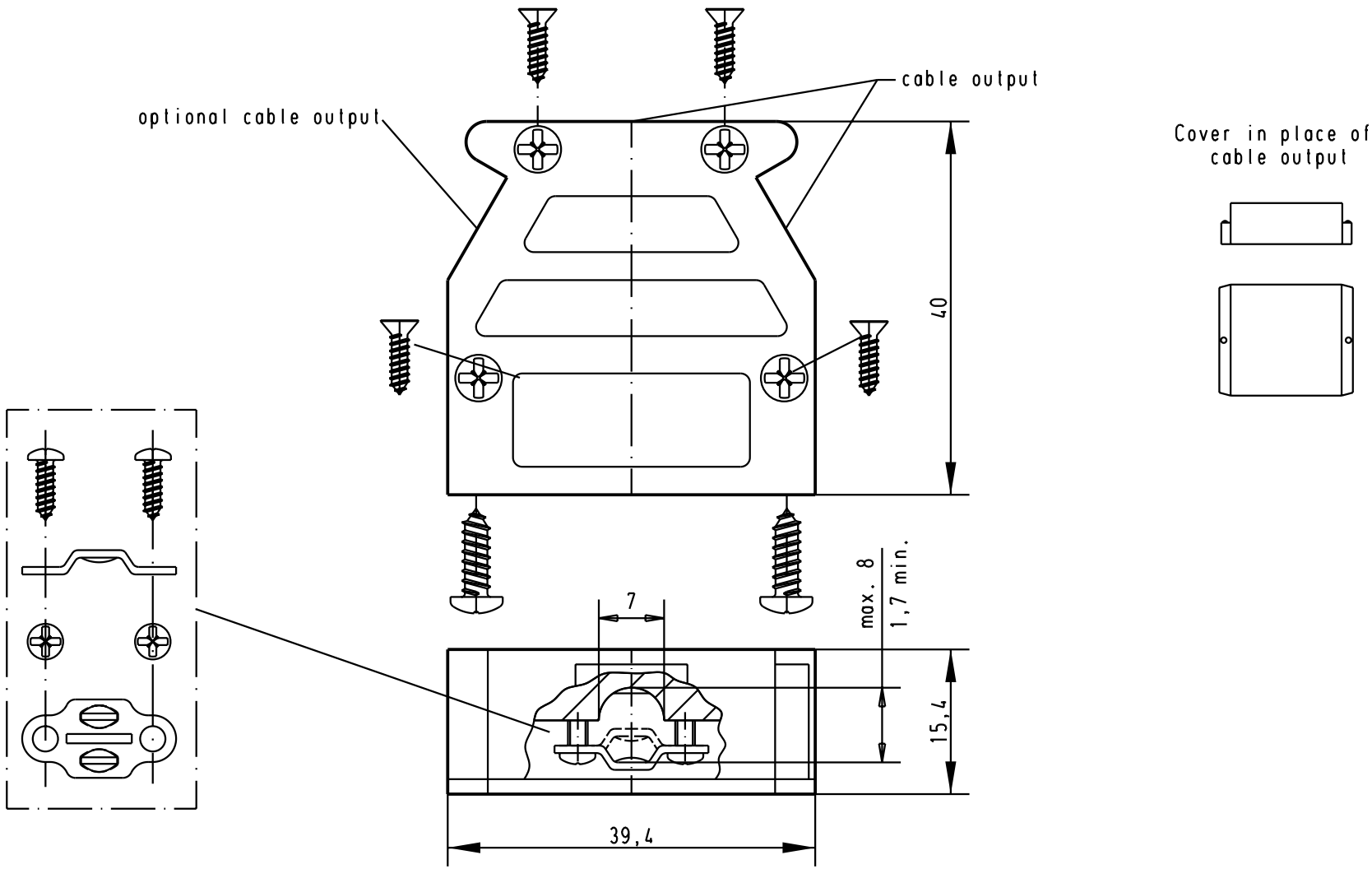

						Dat.	Name	All Dim. in mm Orig. Size DIN A 4	D-Sub, Hood 15 poles Top and side cable entry	Maßstab/ *Scale*
					Detail.	28-MAR-02	CV			1.5:1
					Insp.					
					Stand.					
09 67 015 0453	Thermoplastic metallized				HARTING EURL F-95972 Paris				TB 0967015045x	Blatt/ *Page*
09 67 015 0452	Thermoplastic black	29760	28-MAR-02	CV						1
Part number	Material	Mod.	Dat.	Name					Sub.	