SIGN	DATE	DESCRIPTION	APPROVER
1	2010.01.30	The material is changed from Brass to Copper	Jacke
2	2010.01.30	The Part No is changed	Jacke
3	07/31`12	Added TUV standard	Chen Bo
4	07/31`12	The Dimension is added	Chen Bo
5	07/31`12	The IEC spec is removed	Chen Bo
6	07/31`12	Soldering temperature changed from 250°C±10°C/5Sec to 260°C± 5°C/5Sec	Chen Bo
THIS IS CAD DRAWING, DO NOT REVISE MANUALLY!!!			

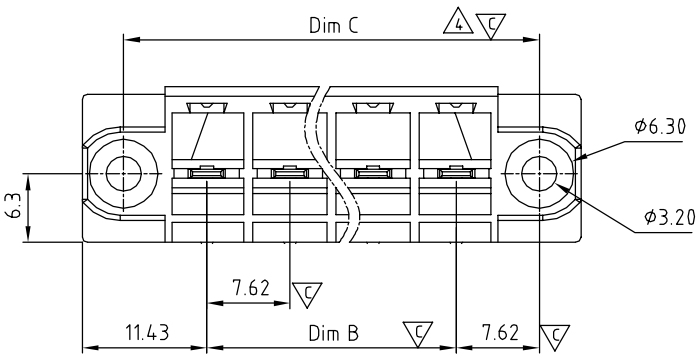

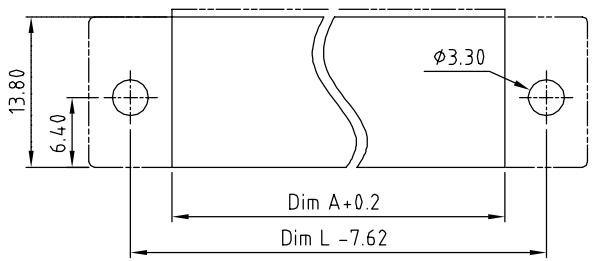

Cutort dimensions

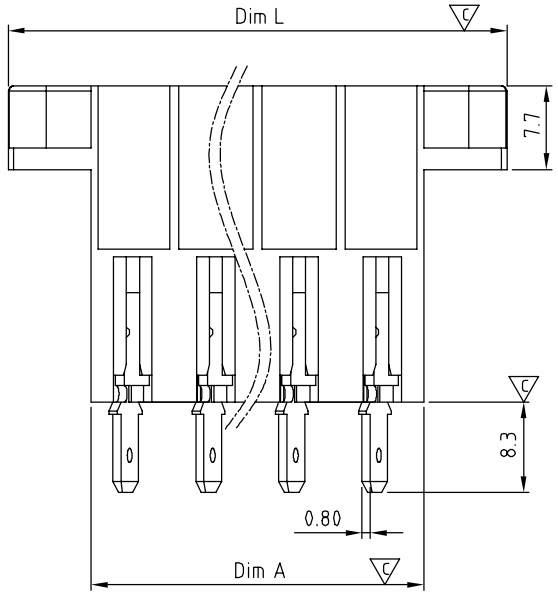

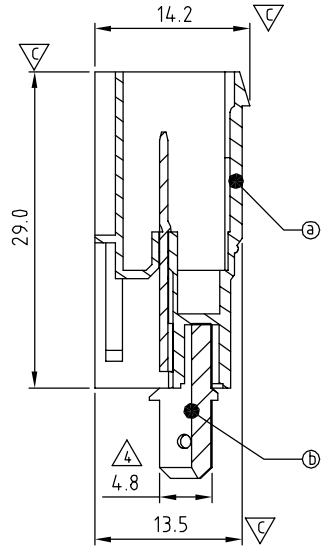

Material:

- Item ⓐ Terminal(housing): Thermoplastic (UL94V-0)
- 1 Item ⓑ Male contact pin: Copper Tin plated

5 Electrical	cULus	TUV
Voltage rating:	300V	800V
Current rating:	20A[1] 32A[2]	32A
Withstanding Voltage:	1.6KV	6KV
Operating temperature:	-40°C to +115°C	
6 Soldering temperature:	260°C± 5°C/5 Sec	
3 Safety Approval:	c UL us	TÜV
Critical dimension:	C	

2 VC xx 02 x 1 xxxx G

Solid Block
02 2 POLES
03 3 POLES
... ...
16 16 POLES

COLOR
0 Black (RAL9005)
2 Red (RAL3001/D)
3 Orange(RAL2011/P)
4 Yellow(RAL1018/A)
5 Green(RAL6018/T)
6 Blue (RAL5015/A)
8 Grey(RAL7035/D)

000 0 Standard @ Logo
000 A Standard ANY Logo
Any special item by customer request, please contact sales department.

G RoHS compliant (lead<4%) In copper Alloy

DIM		TOL 2P-6P	TOL 7P-12P	TOL 13P-16P
Dim L	(N+2)×7.62	±0.15	±0.20	±0.30
Dim A	N×7.62	±0.15	±0.20	±0.30
Dim B	(N-1)×7.62	±0.15	±0.20	±0.30
Dim C	(N+1)×7.62	±0.15	±0.20	±0.30

ANYTEK

CUSTOMER COPY

ALL RIGHTS RESERVED. REPRODUCTION OR ISSUE TO THIRD PARTIES IN ANY FORM WHATEVER IS NOT PERMITTED WITHOUT WRITTEN AUTHORITY FROM THE PROPRIETOR. PROPERTY OF ANYTEK TECHNOLOGY CO., LTD

TITLE	VC 7.62 SERIES (Feed-through header with slip-on connection)				
PART NO.	VCxx02x1xxxxG			DWG NO.	8VC0005
APPROVED	CHECKED	DESIGNED	DRAWN	CUST NO.	
		Chen Bo 07/31`12	Chen Bo 07/31`12	SHEET: 01/01	UNIT: mm; SCALE: NONE; REV.: D

Tolerance: X. ±0.50; X.X ±0.30; X.XX ±0.10; X° ±1°