B AJ-107SP-CP

ITEM #	PART #	QTY	DESCRIPTION
1	AJ-107SP-4	1	JACK ASSEMBLY
2	AJ-107S-2	1	STRAIN RELIEF
3	AJ-107SP-6	1	SHELL
4	SEE TABLE #1	1	BUSHING, RUBBER
5	SEE TABLE #1	1	WASHER, METAL
6	SEE TABLE #1	1	SPRING
7	AP-116-6	1	STUD

TABLE #1

PART #	∅ CABLE	BUSHING	WASHER	SPRING
AJ-107SP-01	∅ .165 ± .010	AP-116-17	AP-116-2	AP-116-4
AJ-107SP-02	∅ .228 ± .010	AP-116-18	AP-116-2	AP-116-4
AJ-107SP	∅ .250 ± .010	AP-116-8	AP-116-2	AP-116-4
AJ-107SP-04	∅ .290 ± .010	AP-116-19	AP-116-2	AP-116-4
AJ-107SP-05	∅ .320 ± .010	AP-116-20	AP-116-22	AP-116-21

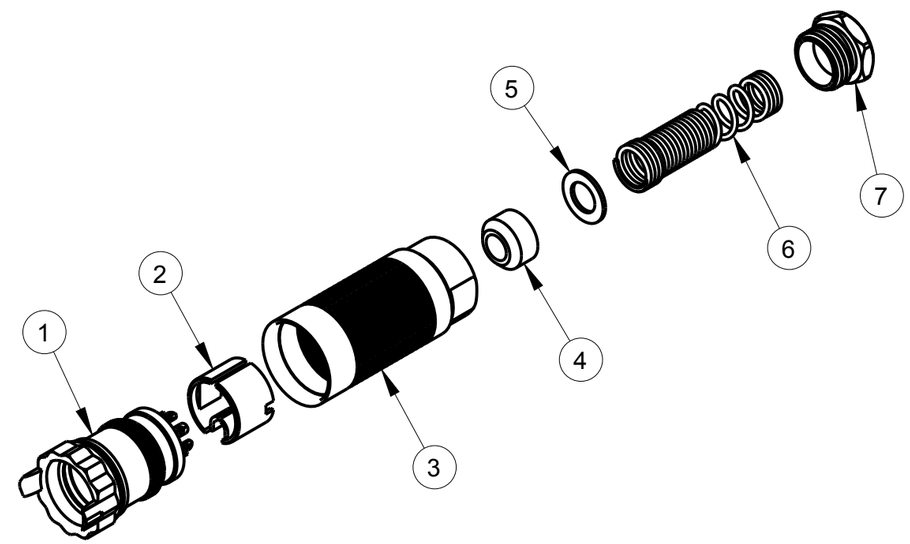

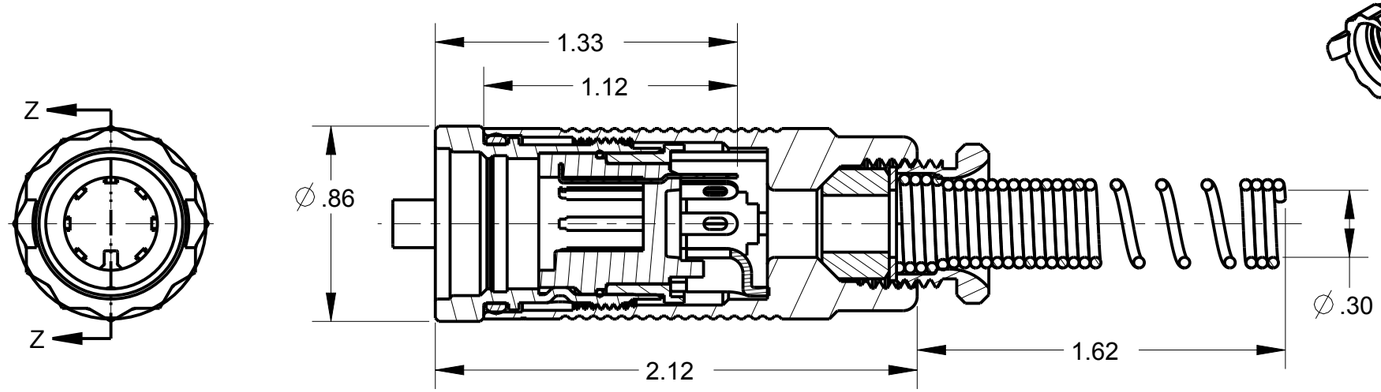

SECTION Z-Z

THIS DOCUMENT CONTAINS PROPRIETARY INFORMATION OF NEXUS,INCORPORATED AND SUCH INFORMATION MAY NOT BE DISCLOSED TO OTHERS FOR ANY PURPOSE OR USED FOR ANY PURPOSE WITHOUT THE WRITTEN CONSENT OF NEXUS.

LET.	REVISION	CN #	DATE	CHK.
B	ADD: TABLE #1	229	9/14 2015	HR
A	NEW RELEASE		6/25 2015	HR

DWN.BY HR DATE 6/25/15
CHECKED BY DATE
APPR.BY DATE

UNLESS OTHERWISE SPECIFIED:
DIMENSIONS ARE IN INCHES &/OR [mm]
TOLERANCES:
DECIMAL: .XX[X.X] ± .0X[0.X] .XXX[X.XX] ± .00X[0.0X]
FRACTION: X/X ± X/XX
ANGLES: .X ± .X °

MATERIAL
FINISH
WEIGHT —— SCALE = 0.33 :1
TITLE 7 CONNECTOR AUDIO JACK W/SPG BEND RELIEF
DO NOT SCALE DWG. SHEET 1 OF 1

NEXUS
STAMFORD,CONN

SIZE B DWG. NO. AJ-107SP-CP