THIS DRAWING IS UNPUBLISHED. RELEASED FOR PUBLICATION 20
© COPYRIGHT 20 BY - ALL RIGHTS RESERVED.

REVISIONS

P	LTR	DESCRIPTION	DATE	DWN	APVD
	A	REVISED PER ECO-19-011916	06AUG2019	AP	JW
	B	REVISED PER ECO-19-013709	06SEP2019	CJV	JW
	B1	REVISED PER ECN-22-158426	10JUNE2022	TM	DZ

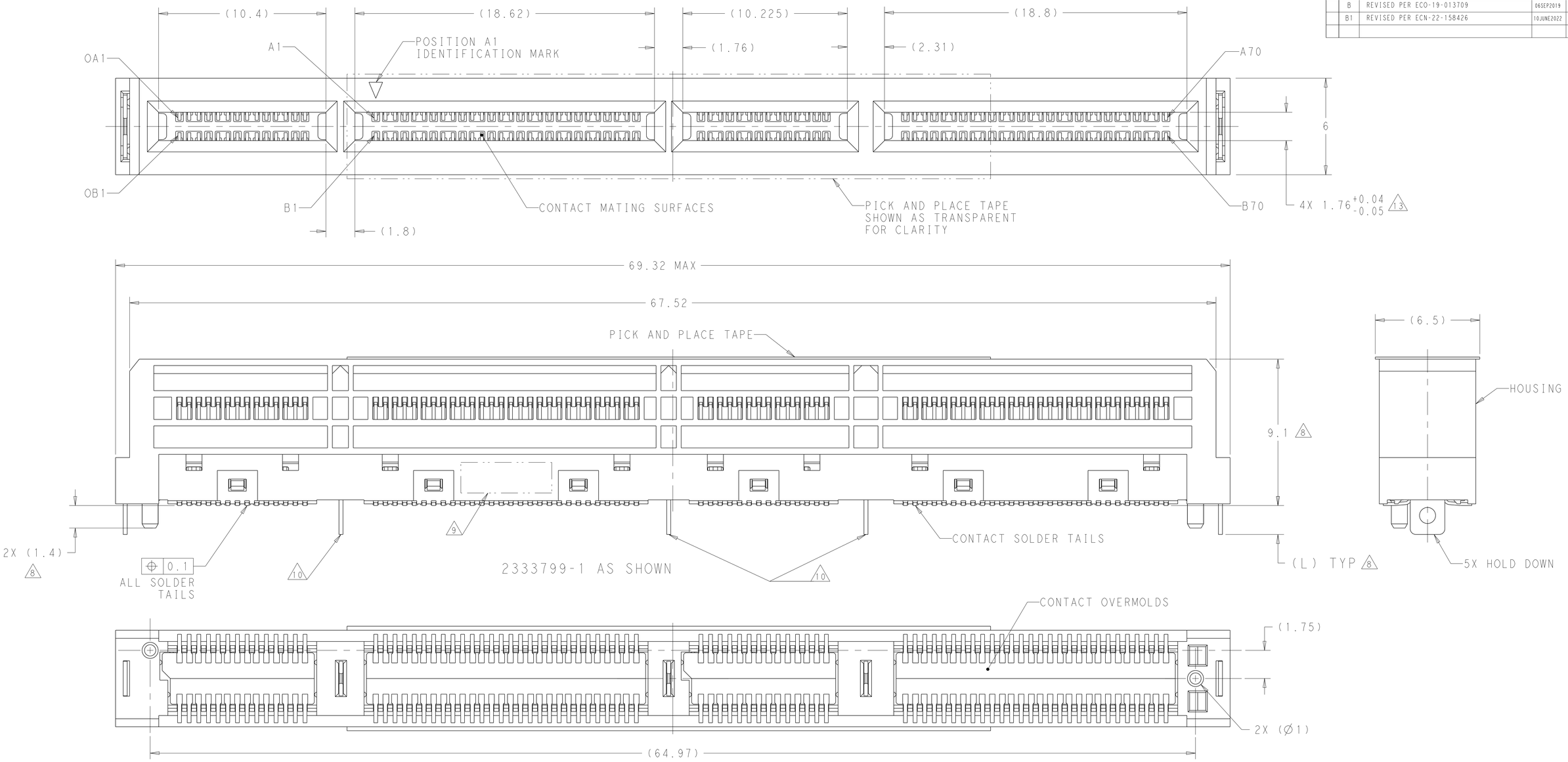

POCKET TAPE PITCH	DIM A	(L)	PACKAGING	PLATING	PICK AND PLACE TAPE	NUMBER OF HOLD DOWNS	MATING CYCLES	PART NUMBER
16	6.5	1.8	POCKET TAPE	0.76µm Au	YES	5	200	1-2333799-2
24	5	1.8	POCKET TAPE	0.76µm Au	YES	5	200	1-2333799-1
24	6.5	1.8	POCKET TAPE	0.76µm Au	YES	5	200	1-2333799-0
24	6.5	1.2	POCKET TAPE	0.76µm Au	YES	2	200	2333799-9
24	6.5	1.2	POCKET TAPE	0.76µm Au	NO	2	200	2333799-8
24	6.5	1.8	POCKET TAPE	0.76µm Au	NO	5	200	2333799-7
-	6.5	1.8	HARD TRAY	0.76µm Au	YES	2	200	2333799-6
-	6.5	1.8	HARD TRAY	0.38µm Au	YES	2	100	2333799-5
-	6.5	1.8	HARD TRAY	FLASH Au/Pd Ni	YES	2	50	2333799-4
-	6.5	1.8	HARD TRAY	0.76µm Au	YES	5	200	2333799-3
-	6.5	1.8	HARD TRAY	0.38µm Au	YES	5	100	2333799-2
-	6.5	1.8	HARD TRAY	FLASH Au/Pd Ni	YES	5	50	2333799-1

1. HOUSING AND CONTACT OVERMOLDS - LCP, BLACK, UL94V-0 RATED. CONTACTS AND HOLD DOWNS - COPPER ALLOY. PICK AND PLACE TAPE - POLYIMIDE FILM.
2. CONTACTS - GOLD PLATE ON MATING SURFACES, TIN PLATE ON SOLDER TAILS. HOLD DOWNS - TIN PLATE.
3. DATUMS AND BASIC DIMENSIONS ESTABLISHED BY CUSTOMER.
4. DESIGNED FOR A 1.5 MIN THICK HOST PC BOARD.
5. SEE MSA SPECIFICATION FOR ADDITIONAL PADDLE CARD LAYOUTS COMPATABLE WITH THIS RECEPTACLE AND FOR OPTIONAL SPLIT CONTACT PAD LAYOUTS FOR THE PADDLE CARD. SPECIFICATION PINOUT MAY ALSO DESIGNATE PAD SEQUENCE DIFFERENT FROM ILLUSTRATION.
6. POSITIONS DESIGNATED AS "SIGNAL" ARE REQUIRED LOCATIONS FOR HIGH SPEED DIFFERENTIAL PAIR SIGNALING. THESE LOCATIONS MAY ALSO BE USED FOR SUPPORTING SIDEBAND SIGNALS OR OTHER UTILITY PURPOSES. POSITIONS DESIGNATED AS "GROUND" ARE REQUIRED WHEN SUPPORTING HIGH SPEED DIFFERENTIAL SIGNALS. THESE LOCATIONS MAY ALSO BE USED FOR SIDEBAND SIGNALS OR OTHER UTILITY PURPOSES.
7. COMPONENT AND TRACE KEEP OUT AREA. EACH EDGE 0.15 MIN FROM EDGE OF HOLE.
8. DIMENSION APPLIES FROM CONTACT TAILS.
9. DATE CODE MARKED IN APPROXIMATE AREA SHOWN.
10. ADDITIONAL HOLD DOWNS FOR 2333799-1 THRU 2333799-3, AND 2333799-7 ONLY.
11. HARD TRAY PACKAGED FOR PICK AND PLACE SURFACE MOUNT PROCESSING, SEE FIGURE 1.
12. TAPE AND REEL PACKAGED FOR PICK AND PLACE SURFACE MOUNT PROCESSING, SEE FIGURE 2. POCKET TAPE WIDTH = 88.
13. MATES WITH BOARDS DESIGNED TO THE SFF-TA-1002 SPECIFICATION.

THIS DRAWING IS A CONTROLLED DOCUMENT.

DIMENSIONS: mm

TOLERANCES UNLESS OTHERWISE SPECIFIED:
0 PLC ±0.1
1 PLC ±0.1
2 PLC ±0.1
3 PLC ±
4 PLC ±
ANGLES ±5°

MATERIAL 1
FINISH 2

DWN TARUN MARRI 21MAR2022
CHK DAVID ZHANG 21MAR2022
APVD DAVID ZHANG 21MAR2022
PRODUCT SPEC 108-130021
APPLICATION SPEC 114-130008
WEIGHT -

TE Connectivity

NAME RECEPTACLE ASSEMBLY, VERTICAL, 168 POSITION, SLIVER 2.0

SIZE A1 | CAGE CODE 00779 | DRAWING NO C-2333799 | RESTRICTED TO -

CUSTOMER DRAWING | SCALE 8:1 | SHEET 1 OF 5 | REV B1

4805 (3/13)

THIS DRAWING IS UNPUBLISHED. RELEASED FOR PUBLICATION 20
© COPYRIGHT 20 BY - ALL RIGHTS RESERVED.

REVISIONS

P	LTR	DESCRIPTION	DATE	DWN	APVD
	-	SEE SHEET 1	-	-	-

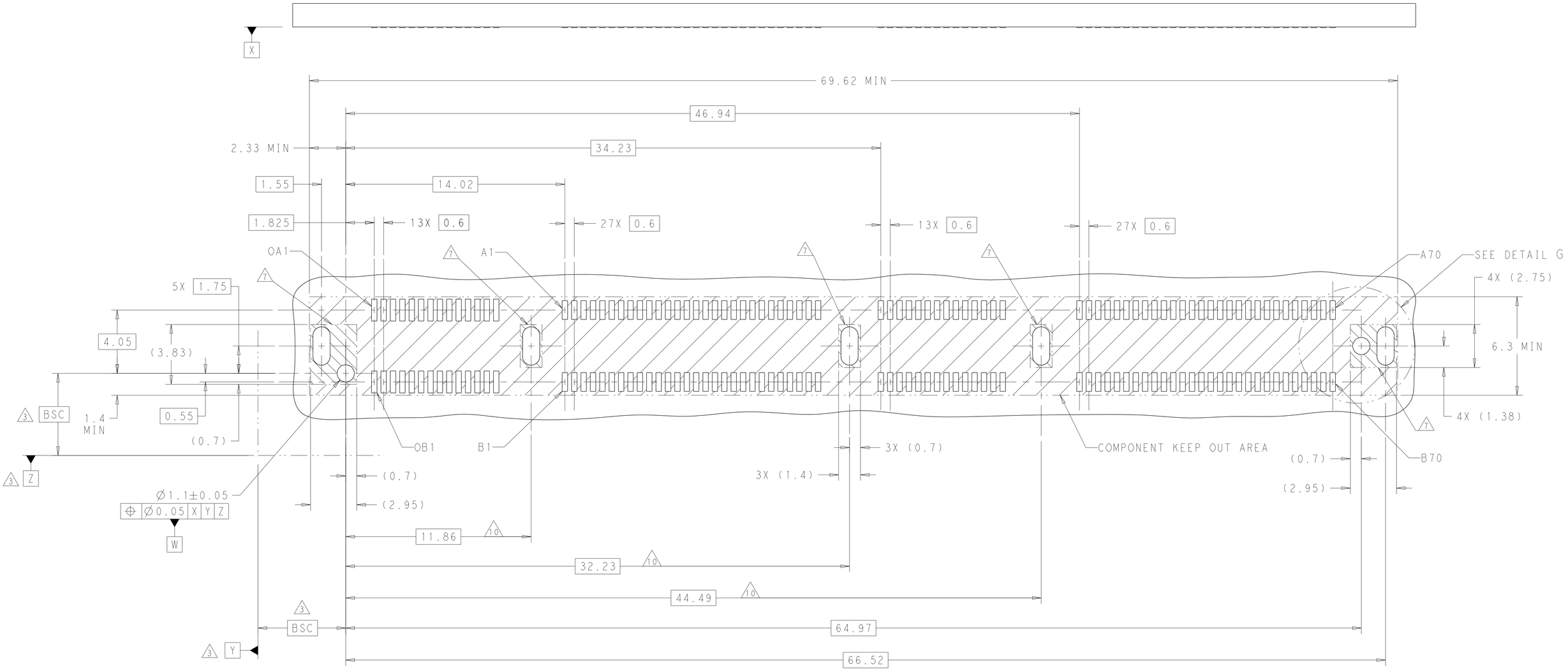

RECOMMENDED PCB LAYOUT
AND KEEP OUT AREA

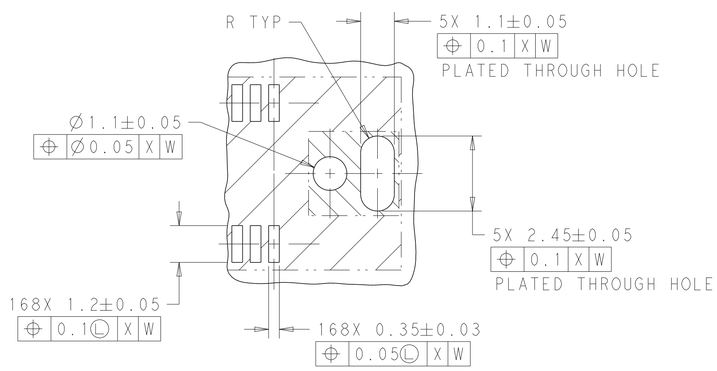

DETAIL G
SCALE 10:1

THIS DRAWING IS A CONTROLLED DOCUMENT.

DIMENSIONS: mm

TOLERANCES UNLESS OTHERWISE SPECIFIED:
0 PLC ±0.1
1 PLC ±0.1
2 PLC ±0.1
3 PLC ±
4 PLC ±
ANGLES ±5°

MATERIAL 1
FINISH 2

DWN TARUN MARRI 21MAR2022
CHK DAVID ZHANG 21MAR2022
APVD DAVID ZHANG 21MAR2022
PRODUCT SPEC 108-130021
APPLICATION SPEC 114-130008
WEIGHT -

TE Connectivity

NAME RECEPTACLE ASSEMBLY, VERTICAL, 168 POSITION, SLIVER 2.0

SIZE	CAGE CODE	DRAWING NO	RESTRICTED TO
A1	00779	C-2333799	-

CUSTOMER DRAWING | SCALE 5:1 | SHEET 2 OF 5 | REV B1

4805 (3/13)

THIS DRAWING IS UNPUBLISHED. RELEASED FOR PUBLICATION 20
© COPYRIGHT 20 BY - ALL RIGHTS RESERVED.

REVISIONS

P	LTR	DESCRIPTION	DATE	DWN	APVD
	-	SEE SHEET 1	-	-	-

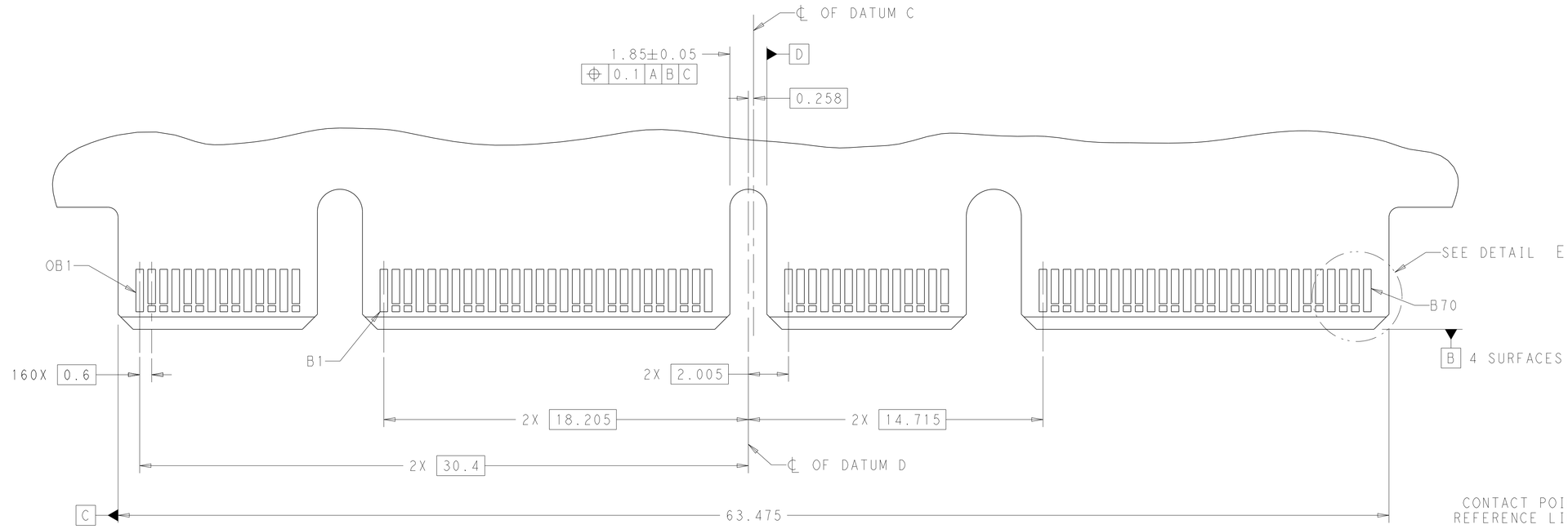

RECOMMENDED PCB OUTLINE DIMENSIONS.
TOLERANCE VALUES ARE CRITICAL. PLEASE BE SURE TO DESIGNATE
TOLERANCES TO PCB SUPPLIER TO ENSURE OPTIMIZED FUNCTIONALITY.

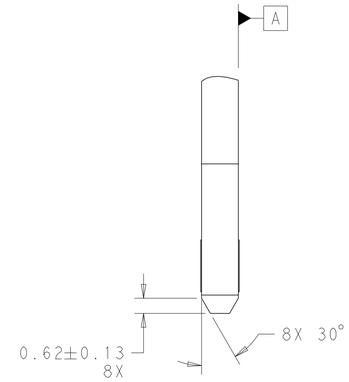

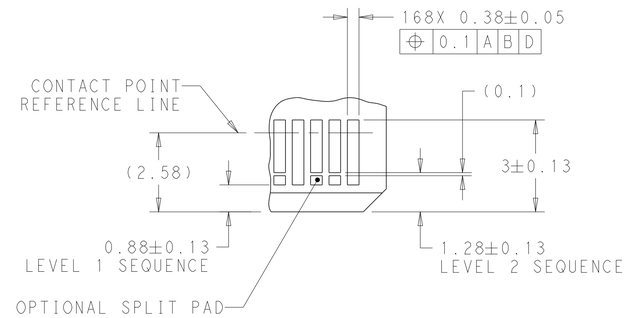

DETAIL E 5
SCALE 10:1

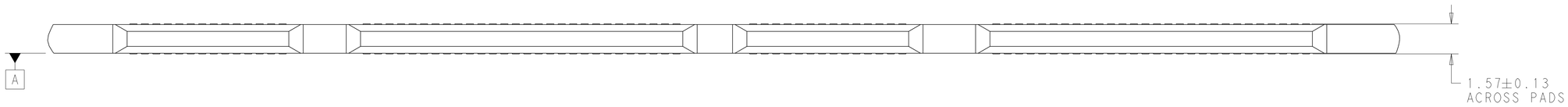

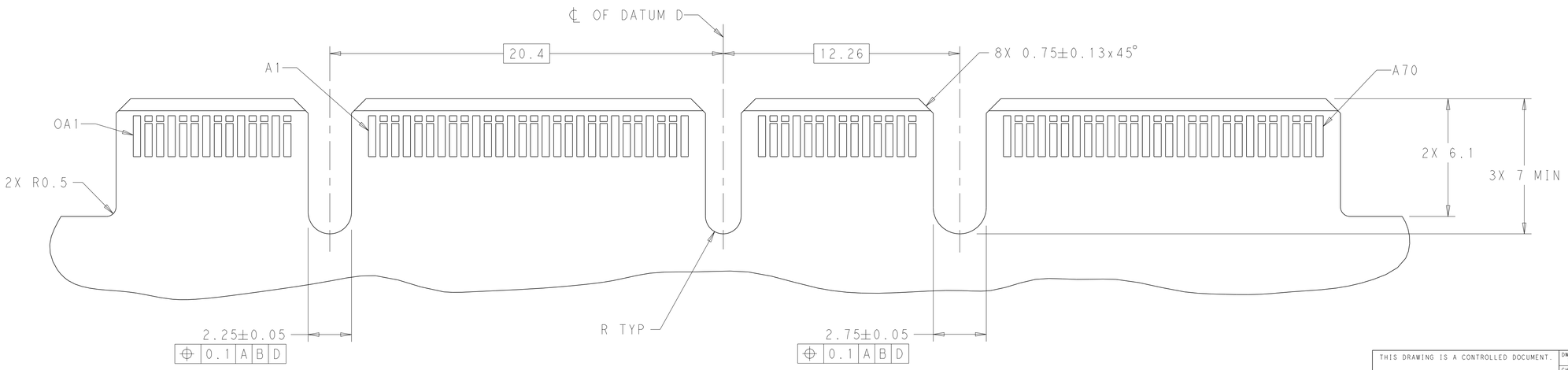

THIS DRAWING IS A CONTROLLED DOCUMENT.

DIMENSIONS: mm

TOLERANCES UNLESS OTHERWISE SPECIFIED:
0 PLC ±0.1
1 PLC ±0.1
2 PLC ±0.1
3 PLC ±-
4 PLC ±-
ANGLES ±5°

MATERIAL
FINISH

DWN TARUN MARRI 21MAR2022
CHK DAVID ZHANG 21MAR2022
APVD DAVID ZHANG 21MAR2022
PRODUCT SPEC 108-130021
APPLICATION SPEC 114-130008
WEIGHT -

TE Connectivity

NAME RECEPTACLE ASSEMBLY, VERTICAL, 168 POSITION, SLIVER 2.0

SIZE	CAGE CODE	DRAWING NO	RESTRICTED TO
A1	00779	C-2333799	-

CUSTOMER DRAWING | SCALE 5:1 | SHEET 3 OF 5 | REV B1

4805 (3/13)

THIS DRAWING IS UNPUBLISHED. RELEASED FOR PUBLICATION 20
© COPYRIGHT 20 BY - ALL RIGHTS RESERVED.

REVISIONS

P	LTR	DESCRIPTION	DATE	DWN	APVD
	-	SEE SHEET 1	-	-	-

CONNECTOR CONTACT IDENTIFICATION 5 6

CONTACT NUMBER	SIDE A	SIDE B
1	GROUND	GROUND
2	SIGNAL	SIGNAL
3	SIGNAL	SIGNAL
4	GROUND	GROUND
5	SIGNAL	SIGNAL
6	SIGNAL	SIGNAL
7	GROUND	GROUND
8	SIGNAL	SIGNAL
9	SIGNAL	SIGNAL
10	GROUND	GROUND
11	SIGNAL	SIGNAL
12	SIGNAL	SIGNAL
13	GROUND	GROUND
14	SIGNAL	SIGNAL
15	SIGNAL	SIGNAL
16	GROUND	GROUND
17	SIGNAL	SIGNAL
18	SIGNAL	SIGNAL
19	GROUND	GROUND
20	SIGNAL	SIGNAL
21	SIGNAL	SIGNAL
22	GROUND	GROUND
23	SIGNAL	SIGNAL
24	SIGNAL	SIGNAL
25	GROUND	GROUND
26	SIGNAL	SIGNAL
27	SIGNAL	SIGNAL
28	GROUND	GROUND
29	GROUND	GROUND
30	SIGNAL	SIGNAL
31	SIGNAL	SIGNAL
32	GROUND	GROUND
33	SIGNAL	SIGNAL
34	SIGNAL	SIGNAL
35	GROUND	GROUND

CONTACT NUMBER	SIDE A	SIDE B
36	SIGNAL	SIGNAL
37	SIGNAL	SIGNAL
38	GROUND	GROUND
39	SIGNAL	SIGNAL
40	SIGNAL	SIGNAL
41	GROUND	GROUND
42	GROUND	GROUND
43	GROUND	GROUND
44	SIGNAL	SIGNAL
45	SIGNAL	SIGNAL
46	GROUND	GROUND
47	SIGNAL	SIGNAL
48	SIGNAL	SIGNAL
49	GROUND	GROUND
50	SIGNAL	SIGNAL
51	SIGNAL	SIGNAL
52	GROUND	GROUND
53	SIGNAL	SIGNAL
54	SIGNAL	SIGNAL
55	GROUND	GROUND
56	SIGNAL	SIGNAL
57	SIGNAL	SIGNAL
58	GROUND	GROUND
59	SIGNAL	SIGNAL
60	SIGNAL	SIGNAL
61	GROUND	GROUND
62	SIGNAL	SIGNAL
63	SIGNAL	SIGNAL
64	GROUND	GROUND
65	SIGNAL	SIGNAL
66	SIGNAL	SIGNAL
67	GROUND	GROUND
68	SIGNAL	SIGNAL
69	SIGNAL	SIGNAL
70	GROUND	GROUND

CONTACT NUMBER	SIDE OA	SIDE OB
1	GROUND	GROUND
2	SIGNAL	SIGNAL
3	SIGNAL	SIGNAL
4	GROUND	GROUND
5	SIGNAL	SIGNAL
6	SIGNAL	SIGNAL
7	GROUND	GROUND
8	SIGNAL	SIGNAL
9	SIGNAL	SIGNAL
10	GROUND	GROUND
11	SIGNAL	SIGNAL
12	SIGNAL	SIGNAL
13	GROUND	GROUND
14	GROUND	GROUND

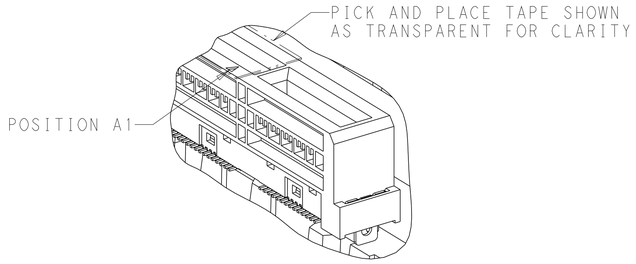

DETAIL J
SCALE 4:1

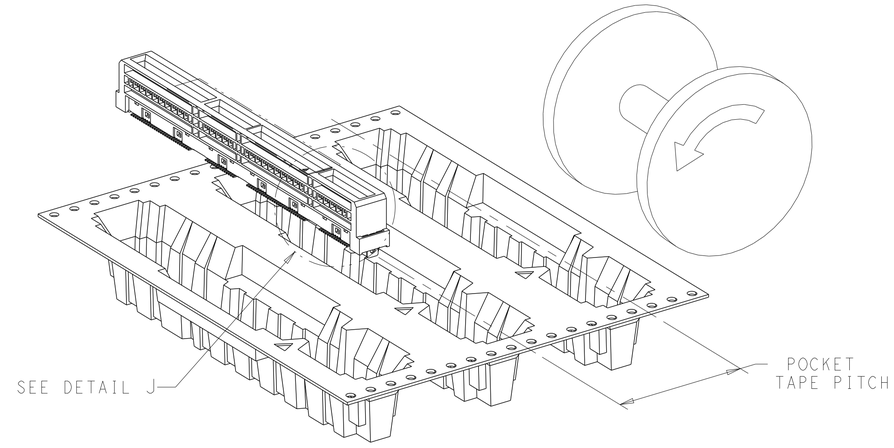

FIGURE 2 12
DIRECTION OFF TOP OF REEL
FOR USER UNREELING
APPLIES TO 2333799-7 THRU 1-2333799-0, 1-2333799-1
SCALE 2:1

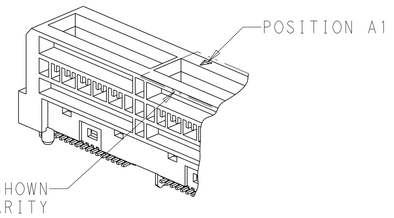

DETAIL H
SCALE 4:1

HARD TRAY PACKAGING-

1. DIMENSIONS:
   TRAY: L= (330), W= (136), H= (19.6)

2. QUANITY:
   48 PIECES PER TRAY.

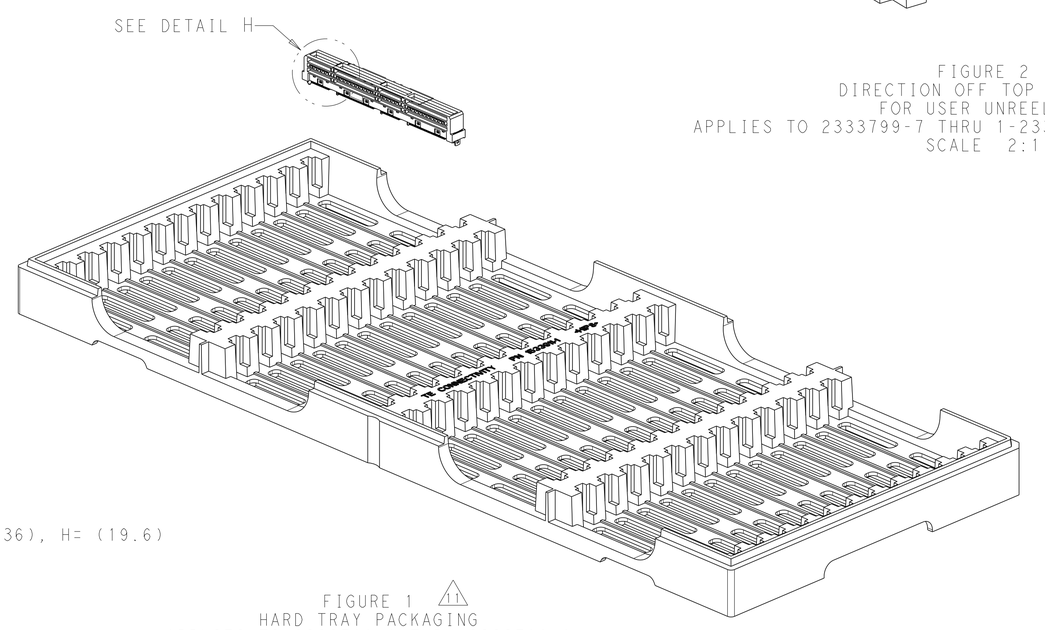

FIGURE 1 11
HARD TRAY PACKAGING
APPLIES TO 2333799-1 THRU 2333799-6
SCALE 1:1

THIS DRAWING IS A CONTROLLED DOCUMENT.

DIMENSIONS: mm

TOLERANCES UNLESS OTHERWISE SPECIFIED:
0 PLC ±0.1
1 PLC ±0.1
2 PLC ±0.1
3 PLC ±-
4 PLC ±-
ANGLES ±5°

MATERIAL
FINISH

DWN TARUN MARRI 21MAR2022
CHK DAVID ZHANG 21MAR2022
APVD DAVID ZHANG 21MAR2022
PRODUCT SPEC 108-130021
APPLICATION SPEC 114-130008
WEIGHT -

TE Connectivity

NAME RECEPTACLE ASSEMBLY, VERTICAL, 168 POSITION, SLIVER 2.0

SIZE	CAGE CODE	DRAWING NO	RESTRICTED TO
A1	00779	C-2333799	-

CUSTOMER DRAWING | SCALE 8:1 | SHEET 4 OF 5 | REV B1

4805 (3/13)

THIS DRAWING IS UNPUBLISHED. RELEASED FOR PUBLICATION 20
© COPYRIGHT 20 BY - ALL RIGHTS RESERVED.

REVISIONS

P	LTR	DESCRIPTION	DATE	DWN	APVD
	-	SEE SHEET 1	-	-	-

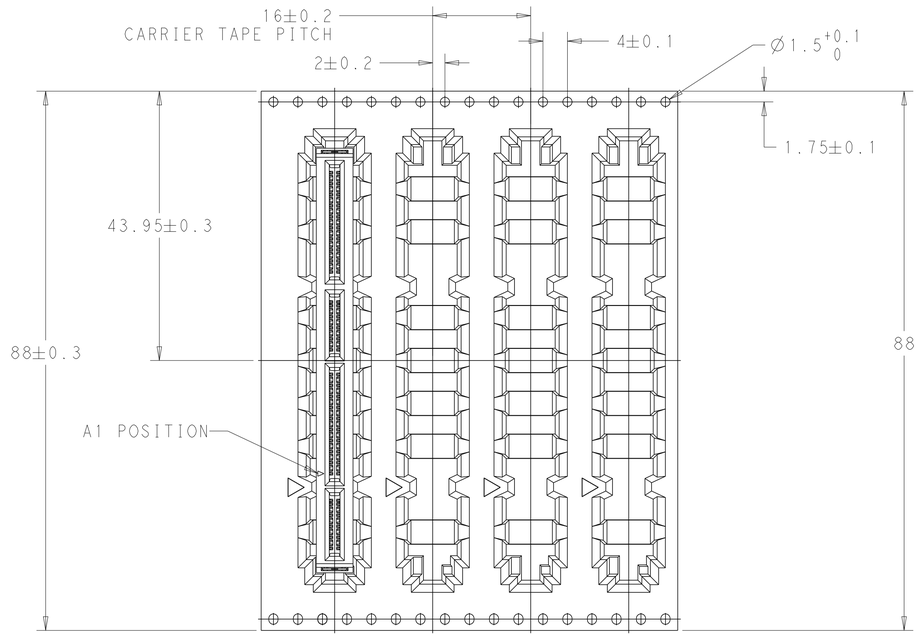

USER DIRECTION OF UNREELING

1-2333799-2

PICK AND PLACE TAPE IS HIDDEN
FOR CLARITY IN THE ABOVE VIEW

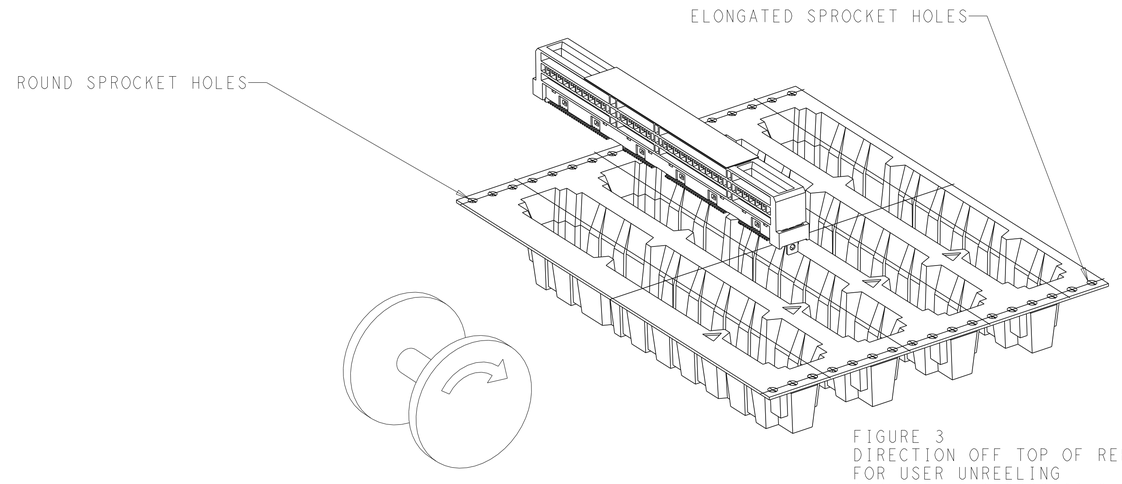

FIGURE 3
DIRECTION OFF TOP OF REEL
FOR USER UNREELING
APPLIES TO 1-2333799-2

THIS DRAWING IS A CONTROLLED DOCUMENT.

DIMENSIONS: mm

TOLERANCES UNLESS OTHERWISE SPECIFIED:
0 PLC ±0.1
1 PLC ±0.1
2 PLC ±0.1
3 PLC ±
4 PLC ±
ANGLES ±5°

MATERIAL
FINISH

DWN TARUN MARRI 21MAR2022
CHK DAVID ZHANG 21MAR2022
APVD DAVID ZHANG 21MAR2022
PRODUCT SPEC 108-130021
APPLICATION SPEC 114-130008
WEIGHT -

TE Connectivity

NAME RECEPTACLE ASSEMBLY, VERTICAL, 168 POSITION, SLIVER 2.0

SIZE	CAGE CODE	DRAWING NO	RESTRICTED TO
A1	00779	C-2333799	-

CUSTOMER DRAWING | SCALE 8:1 | SHEET 5 OF 5 | REV B1

4805 (3/13)