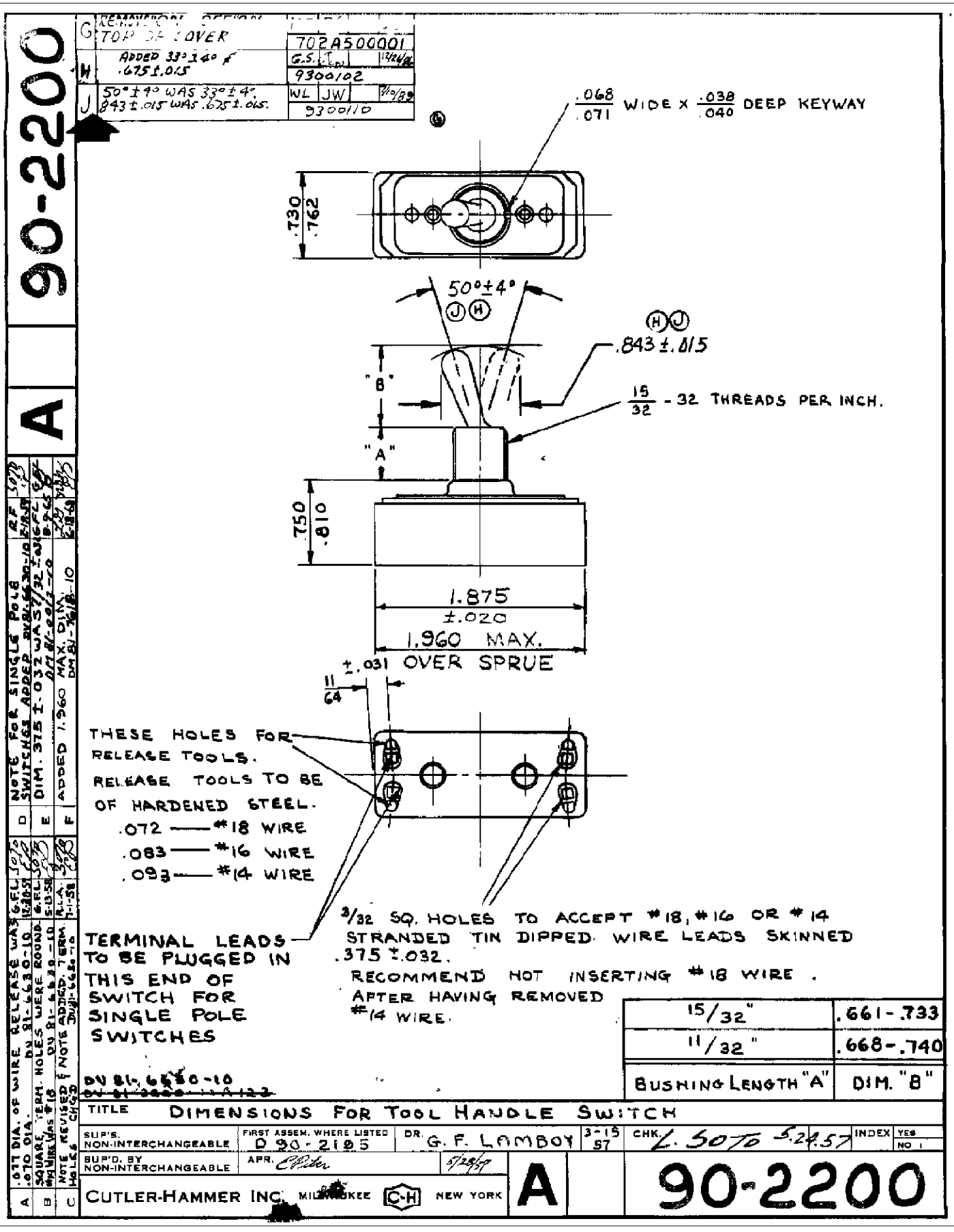
90-2200
A
G REMOVED OPTION TOP OF COVER
702A500001
H ADDED 33° ± 4° & .675 ± .015
9300102
J 50° ± 4° WAS 33° ± 4°. .843 ± .015 WAS .625 ± .015.
9300110
.068 / .071 WIDE X .038 / .040 DEEP KEYWAY
.730 / .762
50° ± 4°
.843 ± .015
"B"
15/32 - 32 THREADS PER INCH.
"A"
.750 / .810
1.875 ± .020
1.960 MAX.
± .031 OVER SPRUE
11/64
THESE HOLES FOR RELEASE TOOLS.
RELEASE TOOLS TO BE OF HARDENED STEEL.
.072 —— #18 WIRE
.083 —— #16 WIRE
.093 —— #14 WIRE
TERMINAL LEADS TO BE PLUGGED IN THIS END OF SWITCH FOR SINGLE POLE SWITCHES
3/32 SQ. HOLES TO ACCEPT #18, #16 OR #14 STRANDED TIN DIPPED WIRE LEADS SKINNED .375 ± .032.
RECOMMEND NOT INSERTING #18 WIRE AFTER HAVING REMOVED #14 WIRE.
15/32" .661 - .733
11/32" .668 - .740
BUSHING LENGTH "A" DIM. "B"
DN 81-6630-10
TITLE DIMENSIONS FOR TOOL HANDLE SWITCH
SUP'S. NON-INTERCHANGEABLE
FIRST ASSEM. WHERE LISTED D 90-2195
DR. G. F. LAMBOY 3-15-57
CHK. L. SOTO 5-24-57
INDEX YES NO
SUP'D. BY NON-INTERCHANGEABLE
APR. 5/28/57
CUTLER-HAMMER INC. MILWAUKEE C-H NEW YORK
A
90-2200