THIS DRAWING AND THE SUBJECT MATTER SHOWN THEREON ARE CONFIDENTIAL AND THE PROPERTY OF BEL/STEWART/TRP CONNECTOR AND SHALL NOT BE REPRODUCED, COPIED, OR USED IN ANY MANNER WITHOUT THE WRITTEN CONSENT OF TRP CONNECTOR.

PRODUCT MAY BE PROTECTED BY ONE OR MORE OF THE FOLLOWING US PATENTS:
5736910 5939955 6425781 6428361 6554638 6840817 7123117
7429195 7717749 7808751 6217391 6149050 7924130

REVISIONS

P	LTR	DESCRIPTION	DATE	DWN	APVD
	G	EC-1411035 COMPANY LOGO CHANGE	06JAN2015	DZ	TL

MECHANICAL:

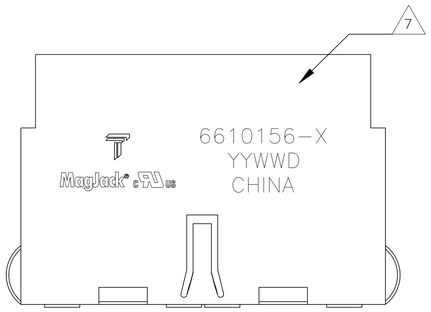

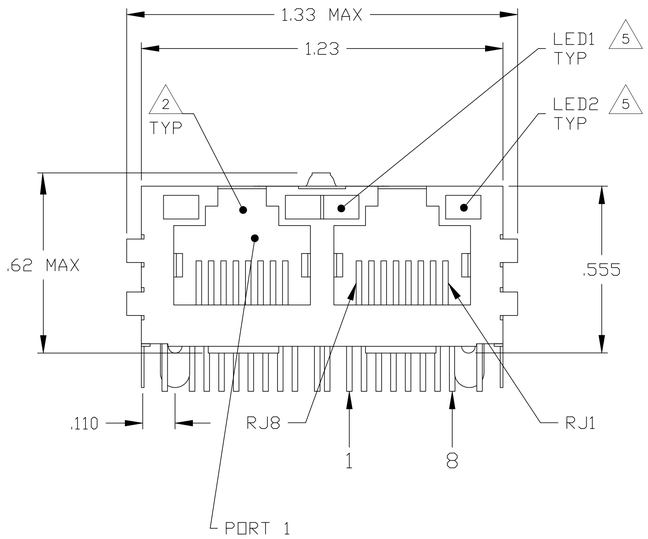

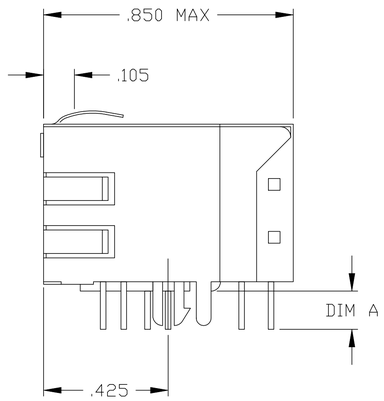

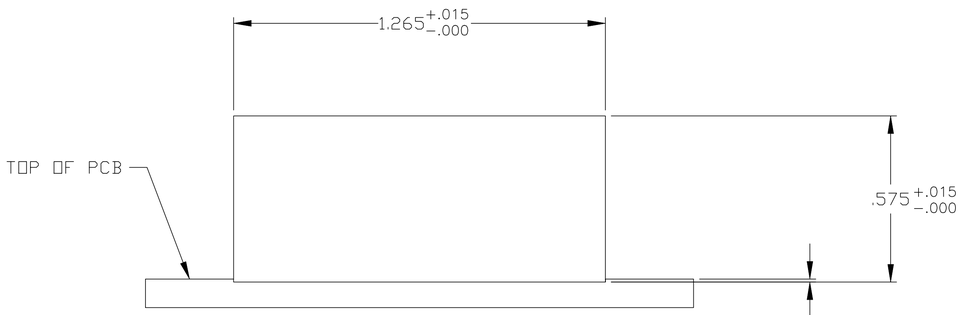

1X2 SUGGESTED PANEL CUTOUT

1. MATERIALS:
-HOUSING - THERMOPLASTIC PET POLYESTER FLAMMABILITY RATING UL 94V-0.
-SHIELD - 0.010" THICK, C26800 BRASS PREPLATED WITH 30µINCH MIN SEMI-BRIGHT NICKEL. SOLDER TABS POST DIPPED WITH 100µINCH MIN SAC SOLDER.
-MOD JACK CONTACTS - 0.0157" X 0.018" PHOSPHOR BRONZE, 50µINCH MIN OVERALL NICKEL UNDERPLATE WITH SELECT 50µINCH MIN HARD GOLD FINISH PLATE. SOLDERTAILS WITH 100µINCH MIN MATTE TIN AND/OR SAC SOLDER DIP.
-LIGHT EMITTING DIODE(LED) - DIFFUSED EPOXY LENS, 0.020" X 0.020" CARBON STEEL WIREFRAME LEADS PRE-PLATED WITH 80µINCH SILVER OVER 40µINCH NICKEL UNDERPLATE OVER 40µINCH COPPER UNDERPLATE. POST-PLATED WITH 100µINCH MIN MATTE TIN AND/OR SAC SOLDER DIP OR PURE TIN SOLDER DIP.

2. RJ45 JACK CAVITY CONFORMS TO FCC RULES AND REGULATIONS PART 68, SUB PART F.

3. MAGNETICS
-IMPEDANCE: 100 OHMS
-TURNS RATIO (CHIP: CABLE): TX = 1:1, RX = 1:1
-OPEN CIRCUIT INDUCTANCE (OCL): 350µH MIN @100kHz, 0.1VRMS, 8mADC BIAS FROM 0°C TO 70°C, TX AND RX
-PERFORMANCE @ 25°C:
INSERTION LOSS (IL): 1.1dB MAX FROM 0.5MHz TO 100MHz
RETURN LOSS (RL): 18dB MIN FROM 0.5MHZ TO 30MHz
18-20LOG(f/30)dB MIN FROM 30.1MHz TO 60MHz
12dB MIN FROM 60.1MHz TO 80MHz
CROSSTALK ATTENUATION: 35dB MIN FROM 0.5MHz TO 40MHz
33-20×LOG(f/50)dB MIN FROM 40.1MHz TO 100MHz
COMMON MODE REJECTION RATIO (CMRR): 30dB MIN FROM 0.5MHz TO 100MHz
-ISOLATION VOLTAGE: 2250VDC (MAX) FOR 60 SECONDS WITH A RISE TIME OF 500V/SEC AND WITH ALL PORTS CONNECTED.

4. OPERATING TEMPERATURE: FROM 0°C TO +70°C.

5. THE LED WITH 250 OHM RESISTORS,LED IS DRIVEN WITH 5V VOLTAGE AND THE MAX OPERATING CURRENT IS 20mA.LED COLOR :
DOMINANT WAVELENGTH (λD): GREEN 568 nm TYP. At VF=5V
FORWARD CURRENT (IF): GREEN 12 mA TYP. at VF=5V
DOMINANT WAVELENGTH (λD): YELLOW 588 nm TYP. At VF=5V
FORWARD CURRENT (IF): YELLOW 13 mA TYP. at VF=5V

6. INDICATED CONNECTIONS ARE FOR A HUB CONFIGURATION. THE MAGNETICS ARE SYMMETRICAL AND SUPPORT AUTO-MDIX.

7. TRP CONNECTOR LOGO, PART NUMBER, DATE CODE, COUNTRY OF ORIGIN AND AGENCY APPROVAL MARKING IN APPROXIMATE LOCATION AS SHOWN.

8. THE PART IS RECOMMENDED FOR WAVE SOLDERING PROCES,PEAK WAVE SOLDERING TEMPERATURE IS 265°C MAX,10 SECONDS MAX.

DIM A	LED1 5	LED2 5	PART NUMBER
.090±.010	GREEN	YELLOW	2-6610156-8
.145±.010	GREEN	YELLOW	5-6610156-8

THIS DRAWING IS A CONTROLLED DOCUMENT.

DIMENSIONS: INCHES

TOLERANCES UNLESS OTHERWISE SPECIFIED:
0 PLC ± -
1 PLC ± -
2 PLC ± .010
3 PLC ± .005
4 PLC ± -
ANGLES ± -

PRODUCT SPEC 108-2100
APPLICATION SPEC -

DWN G. ATTADIA - DOCK5 15MAR2005
CHK D. FAROLE 15MAR2005
APVD D. FAROLE 15MAR2005

trp CONNECTOR a bel group — DONGGUAN CHINA

MODEL NAME: MAGJACK GANG NON-POE

DESC: 1X2 766 10/100 TAB UP W/ LED -

SIZE A1 | CAGE CODE | DRAWING NO C-6610156 | RESTRICTED TO -

CUSTOMER DRAWING | SCALE NTS | SHEET 1 OF 2 | REV G

766 SERIES MAGNETIC CIRCUIT

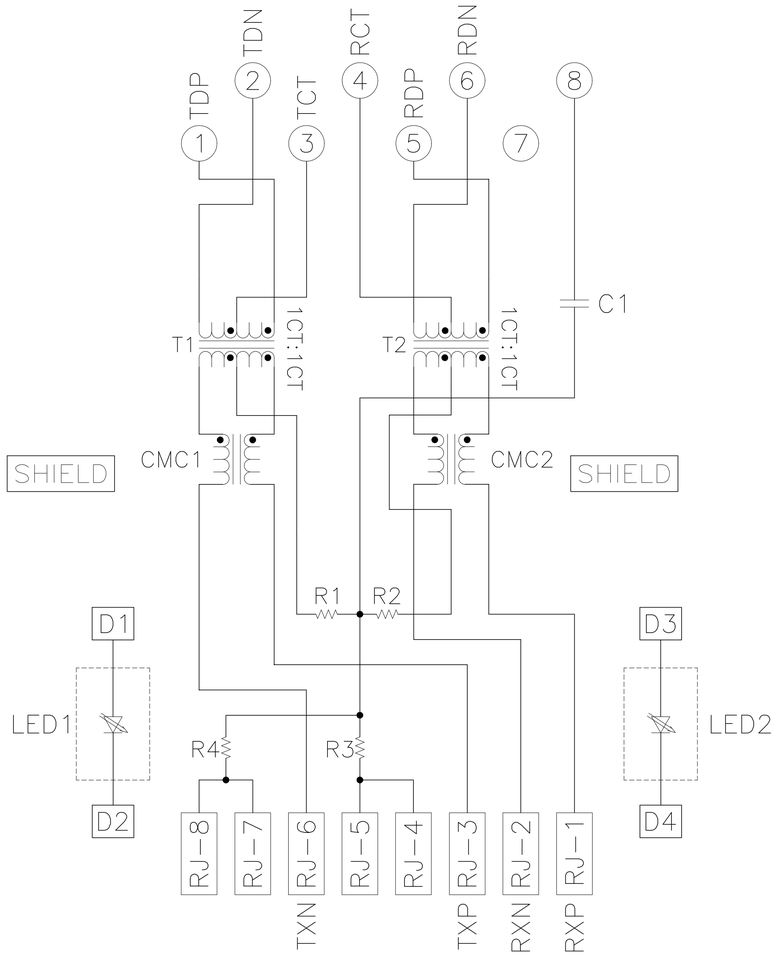

C1 = 1000 pF, 2KV CAPACITOR

R1–R4 = 75 OHMS, 1/16W RESISTORS

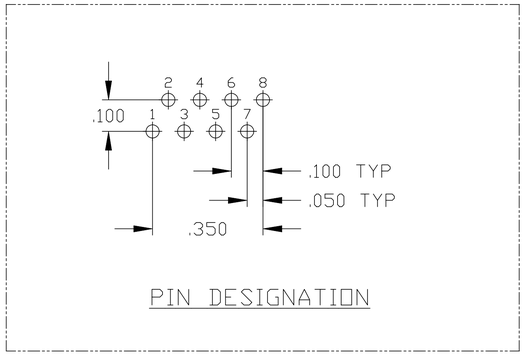

PIN DESIGNATION

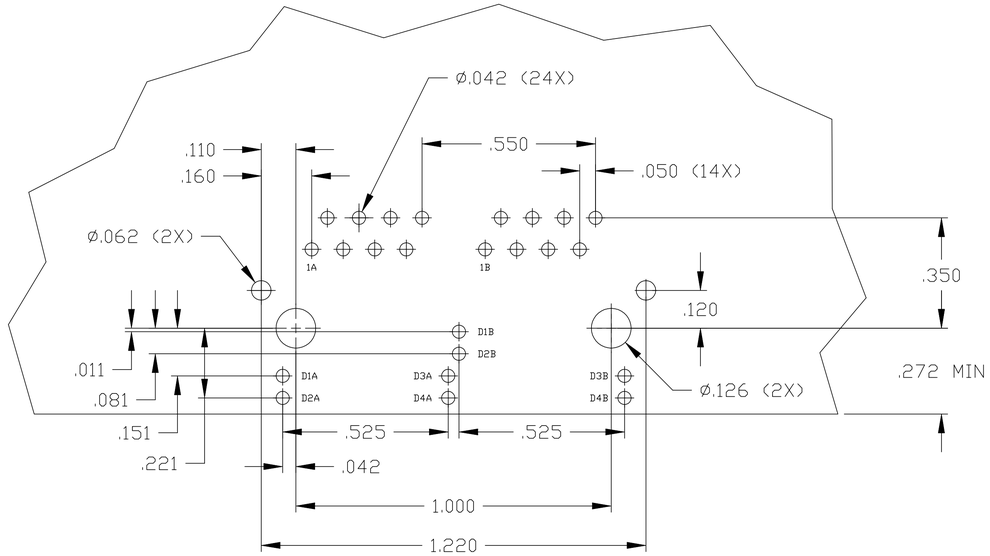

SUGGESTED PCB LAYOUT
(Component Side)

THIS DRAWING IS A CONTROLLED DOCUMENT.	DWN G. ATTADIA – 15MAR2005 DOCK5	trp CONNECTOR a bel group	DONGGUAN CHINA
DIMENSIONS: INCHES	CHK D. FAROLE 15MAR2005		
TOLERANCES UNLESS OTHERWISE SPECIFIED: 0 PLC ± – 1 PLC ± – 2 PLC ± .010 3 PLC ± .005 4 PLC ± – ANGLES ± –	APVD D. FAROLE 15MAR2005	DESC 1X2 766 10/100 TAB UP W/ LED –	
PRODUCT SPEC 108–2100	MODEL NAME MAGJACK GANG NON–POE	SIZE A1 / CAGE CODE / DRAWING NO C-6610156	RESTRICTED TO –
APPLICATION SPEC –	CUSTOMER DRAWING	SCALE NTS / SHEET 2 OF 2	REV G