DO NOT SCALE | DIMENSIONS IN MM.

C.A.D. FILE CODE S. C342062.2

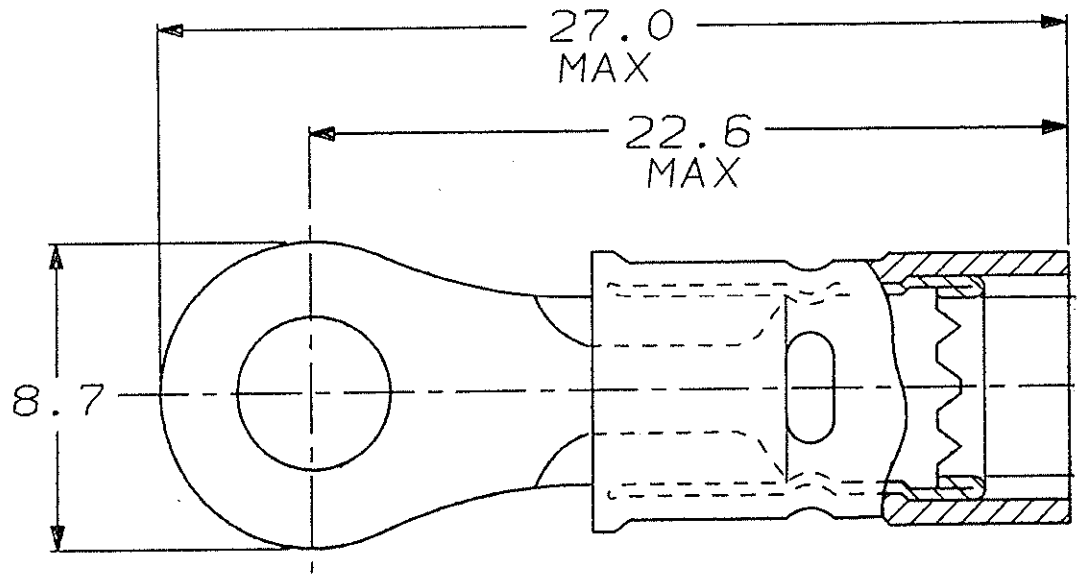

1. WIRE INSUL DIA 3.81-6.35
2. TONGUE MAT'L THICKNESS 1.07 MAX

CUSTOMER DWG
FOR REFERENCE ONLY

THIS INFORMATION IS CONFIDENTIAL AND IS DISCLOSED TO YOU ON CONDITION THAT NO FURTHER DISCLOSURE IS MADE BY YOU TO OTHER THAN AMP PERSONNEL WITHOUT WRITTEN AUTHORIZATION FROM AMP of GREAT BRITAIN LTD.

REV	APPROVED	CHANGE No.	DATE
-	-	- ----	-
-	-	- ----	-
-	-	- ----	-
-	-	- ----	-
-	-	- ----	-
A	dr/tm	063A-0002-04 ----	3/04
2	B.WILSON	EB00-0014-95	17/01/95

TOLERANCES UNLESS OTHERWISE STATED :
DEC ± 0.5
ANGLES ± 1°

DR. C.NIKER 17/01/95
CH. B.WILSON APP. B.WILSON

AMP of Great Britain Ltd.
TERMINAL HOUSE
STANMORE
MIDDX.

NAME 16-14 HD PIDG R/T 5mm STUD

SCALE	LOC	SIZE	DWG.No.	REV	SHEET
NTS	E	A 4	C342062	A	1/1

FORMAT 22/05/03