ITEM #	PART #	QTY	DESCRIPTION
1	TJSS-106-1HC	1	SHELL, HALF
2	TJSS-106-2HC	1	SHELL, HALF
3	TJ-110-21	1	JACK ASSEMBLY
4	TJSS-106-11	1	FILLER, PLUG
5	NX301LB1B	1	SWITCH MOMENTARY
6	NX301LB1G	1	SWITCH MOMENTARY
7	TJS-104-3A	1	STAINLESS STEEL CLIP ASSEMBLY
8	TJ-106-13	2	#4 WASHER, LOCK
9	TJS-106-19	1	SCREW
10	TJSS-106-3	1	SCREW
11	TJSS-106-12	1	CRIMP RING

C TJSS-105HC

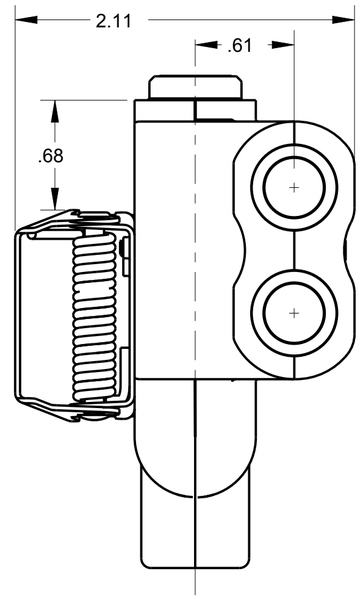

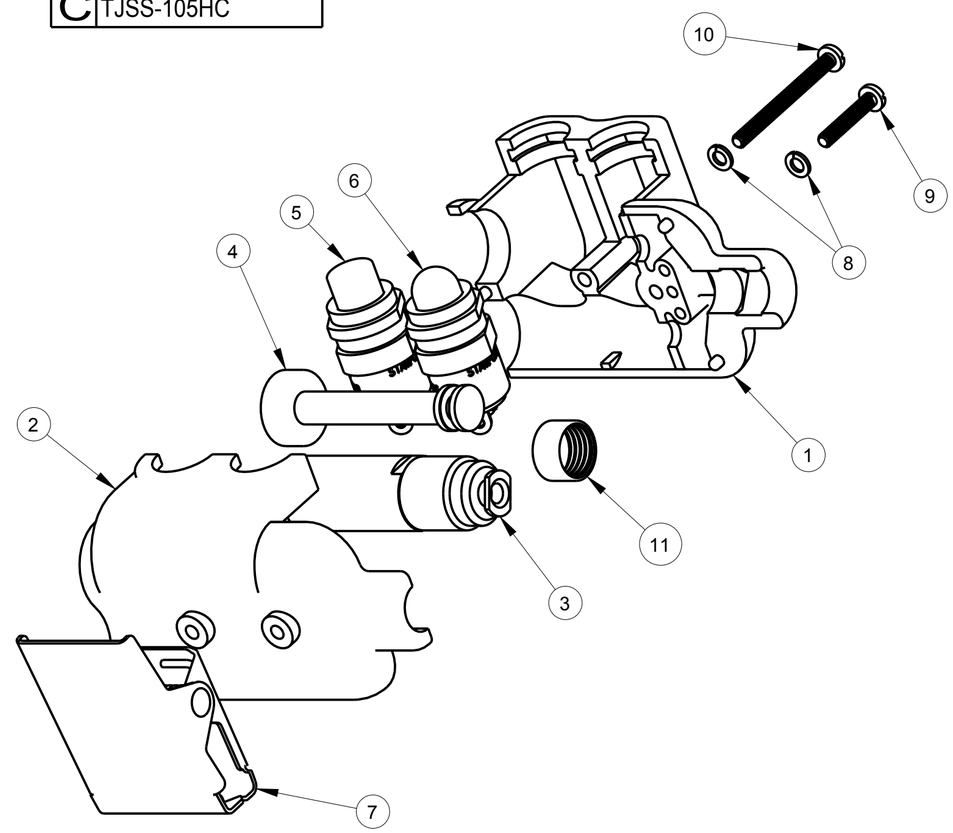

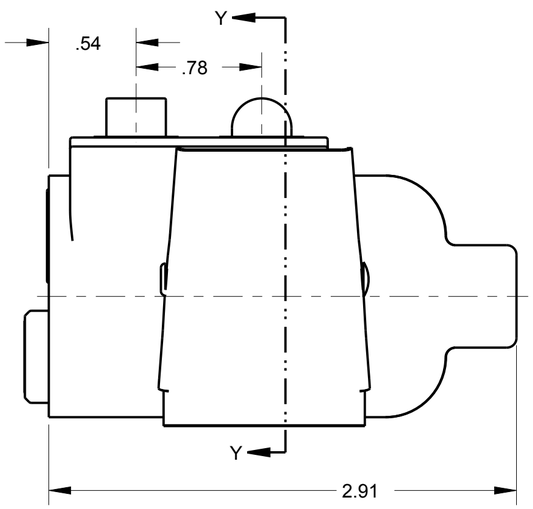

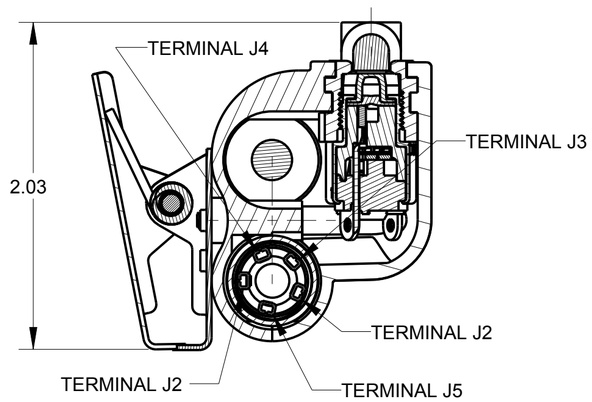

SECTION Y-Y

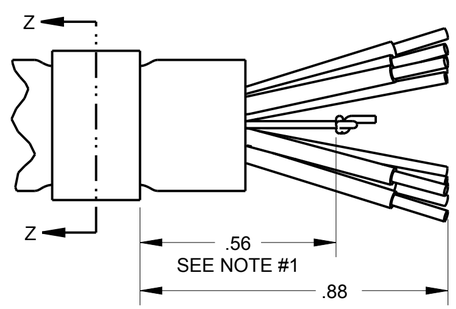

WIRING OPTIONAL

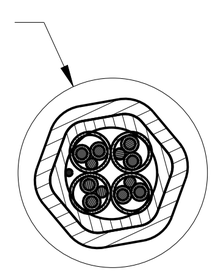

SECTION Z-Z

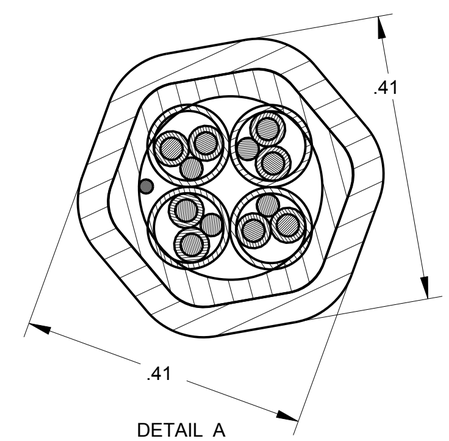

DETAIL A
SCALE 6.000

NOTES:
1) STAY CORD - VARNISH KNOT
2) STRAIN RELIEF CLAMP TJSS-106-12 AFTER CRIMPING. USE DANIELS HX4 CRIMP TOOL & Y146 DIE SET

THIS DOCUMENT CONTAINS PROPRIETARY INFORMATION OF NEXUS,INCORPORATED AND SUCH INFORMATION MAY NOT BE DISCLOSED TO OTHERS FOR ANY PURPOSE OR USED FOR ANY PURPOSE WITHOUT THE WRITTEN CONSENT OF NEXUS.

LET.	REVISION	CN #	DATE	CHK
A	NEW RELEASE	204	6/13 2014	HR

DWN.BY HR DATE Jun-13-14
CHECKED BY DATE
APPR.BY DATE

UNLESS OTHERWISE SPECIFIED DIMENSIONS ARE IN INCHES & OR [mm]
TOLERANCES:
DECIMAL: ±.XX[X.X] ±.XXX[X.XX] ±.XXXX[X.XXX] ± .0X[0.X] ± .00X[0.0X] ± .000X[0.0XX]
FRACTION: ±X/XX ± X/XX ANGLES: ±.X ° ±.X °

MATERIAL
FINISH
WEIGHT ——— SCALE = 1.00 :1
TITLE JACK-TELEPHONE-BIAXIAL SHIELDED 5-CONDUCTOR WITH 2 SWITCHES
DO NOT SCALE DWG. SHEET 1 OF 1

NEXUS
STAMFORD,CONN
SIZE C DWG. NO. TJSS-105HC