THIS DRAWING IS UNPUBLISHED. RELEASED FOR PUBLICATION -,- .
© COPYRIGHT - By Tyco Electronics Japan G.K. ALL RIGHTS RESERVED.

LOC	DIST
J	—

REVISIONS

P	LTR	DESCRIPTION	DATE	DWN	APVD
	01	REDRAWN W/CHANGE ECR-11-020190	04OCT11	TS	KB

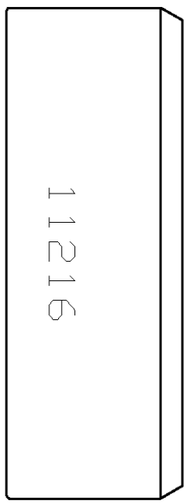

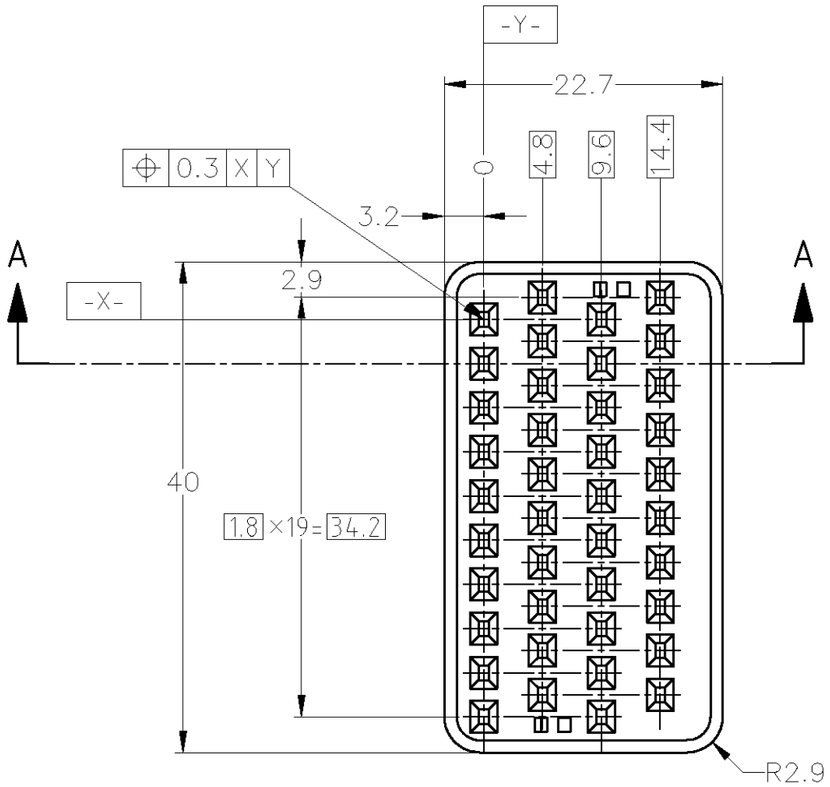

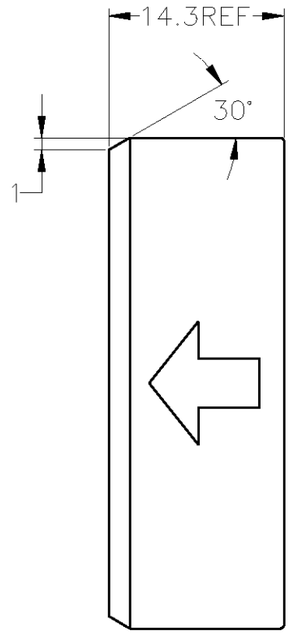

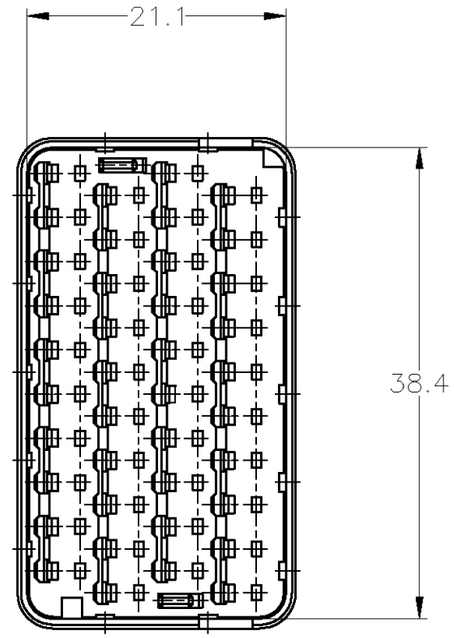

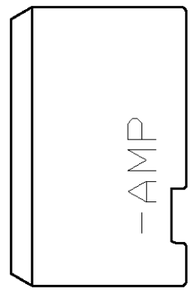

1. INSERT DBL LOCK PLATE IN PLUG HOUSING.
(PN; 178409, 178411)

1. 本品はプラグハウジング型番178409, 178411に装着される。

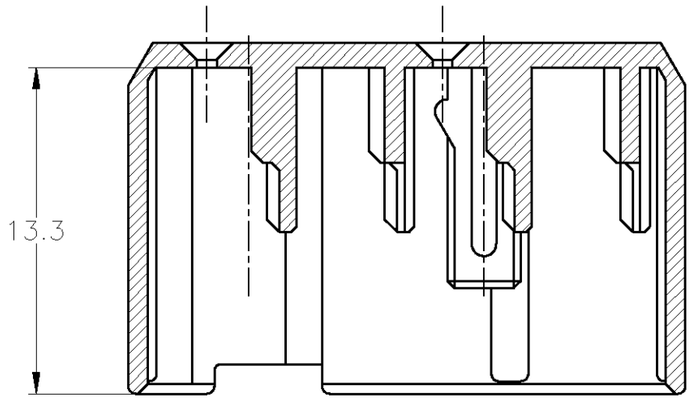

A-A
SCALE 4:1

YELLOW	178413-7
COLOR	PART NUMBER

THIS DRAWING IS A CONTROLLED DOCUMENT.

DIMENSIONS: mm

TOLERANCES UNLESS OTHERWISE SPECIFIED:
0 PLC ±–
1 PLC ±–
2 PLC ±–
3 PLC ±–
4 PLC ±–
ANGLES ±–

TOLERANCES UNLESS OTHERWISE SPECIFIED:
一般公差
10≧ : ±0.2
30≧ > 10 : ±0.25
100≧ > 30 : ±0.3
ANGLE : ±3°

MATERIAL: PBT

FINISH: –

DWN T.SHINOHARA 04OCT11
CHK K.BETSUI 04OCT11
APVD K.BETSUI 04OCT11
PRODUCT SPEC 108-5365
APPLICATION SPEC —
WEIGHT 3.8 g

TE Connectivity

NAME: 040 SERIES SEALED PAIR MATE CONNECTOR DOUBLE LOCK PLATE

SIZE	CAGE CODE	DRAWING NO	RESTRICTED TO
A3	00779	C-178413	—

CUSTOMER DRAWING

SCALE	SHEET	REV
2:1	1 OF 1	01