© – TE Connectivity. All Rights Reserved.

REVISIONS					
P	LTR	DESCRIPTION	DATE	DWN	APVD
	D	REVISED PER ECO-21-006945	28OCT2021	RK	MZ

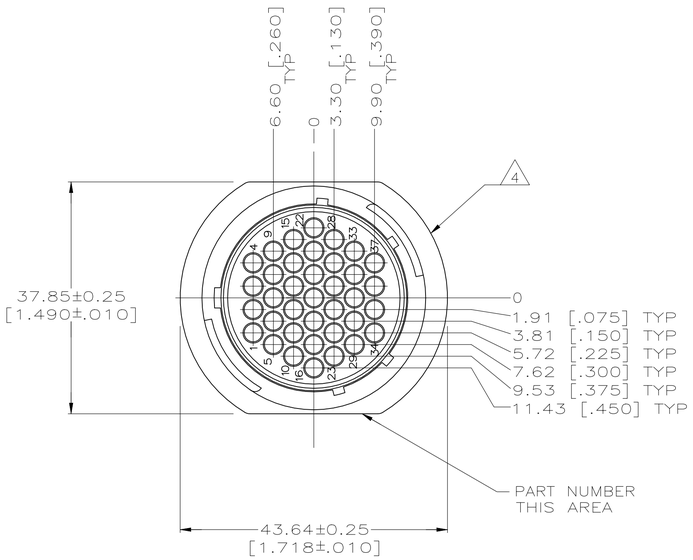

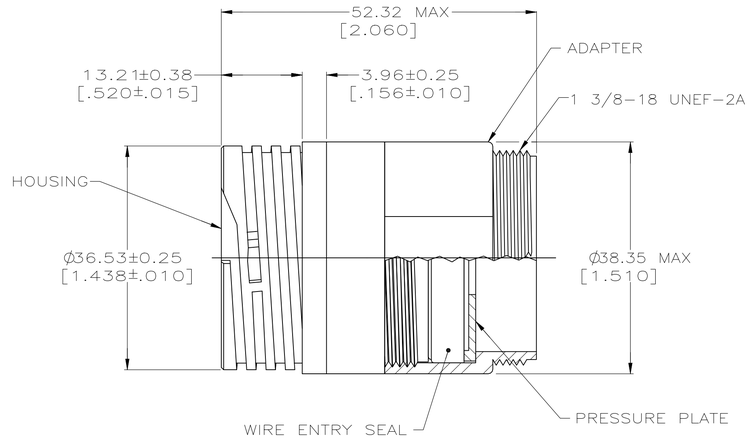

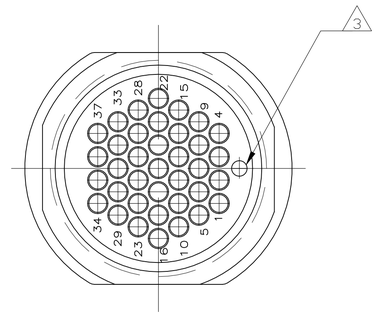

1. ADAPTER AND HOUSING: NYLON, BLACK.
   WIRE ENTRY SEAL: ELASTOMER, RED-IRON OXIDE.
   PERIPHERAL SEAL: ELASTOMER, BLACK.
2. CONNECTOR WILL ACCEPT (37) MULTIMATE PIN CONTACTS.
3. ORIENTATION HOLE USED IN THE MANUFACTURING PROCESS ONLY. THIS HOLE IS NOT INTENDED FOR WIRE INSERTION.
4. TE LOGO LOCATED ON ANY FLANGE EDGE

796287-1
PART NUMBER

THIS DRAWING IS A CONTROLLED DOCUMENT.

DIMENSIONS: INCHES

TOLERANCES, UNLESS OTHERWISE SPECIFIED:
0 PLC ± –
1 PLC ± –
2 PLC ± 0.13(.005)
3 PLC ± –
4 PLC ± –
ANGLES ± –

MATERIAL – 1
FINISH –

DWN C.DORWART 11 NOV 98
CHK K.DOWHOWER 15NOV99
APVD K.DOWHOWER 15NOV99
PRODUCT SPEC 108-1579
APPLICATION SPEC –
WEIGHT –

TE Connectivity

NAME RCPT ASSY, SIZE 23-37, STANDARD SEX, FREE HANGING, SEALED CIRCULAR PLASTIC CONN

SIZE	CAGE CODE	DRAWING NO	RESTRICTED TO
A1	00779	C-796287	–

CUSTOMER DRAWING | SCALE 2:1 | SHEET 1 OF 1 | REV D

4805 (1/15)