© – TE Connectivity. All Rights Reserved.

REVISIONS					
P	LTR	DESCRIPTION	DATE	DWN	APVD
	N	REVISED PER ECO-21-006944	12OCT2021	RK	MZ

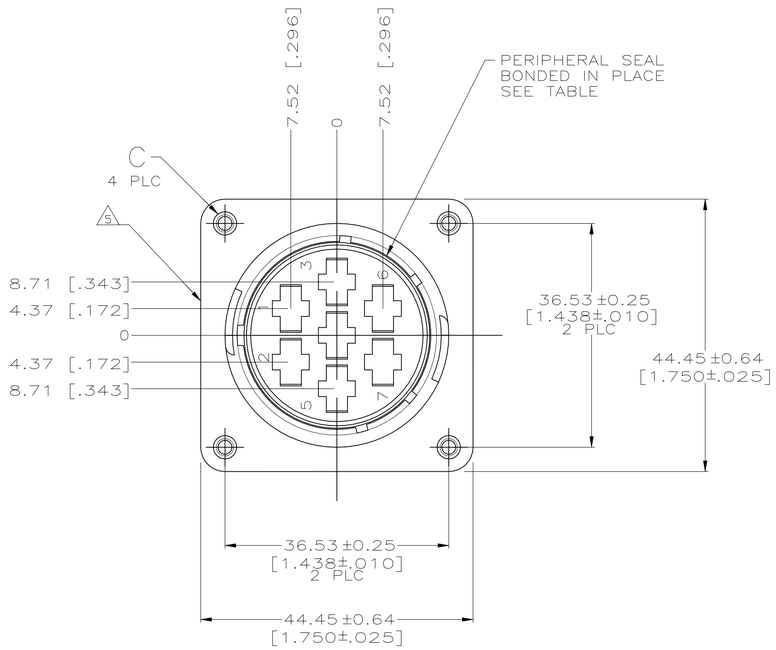

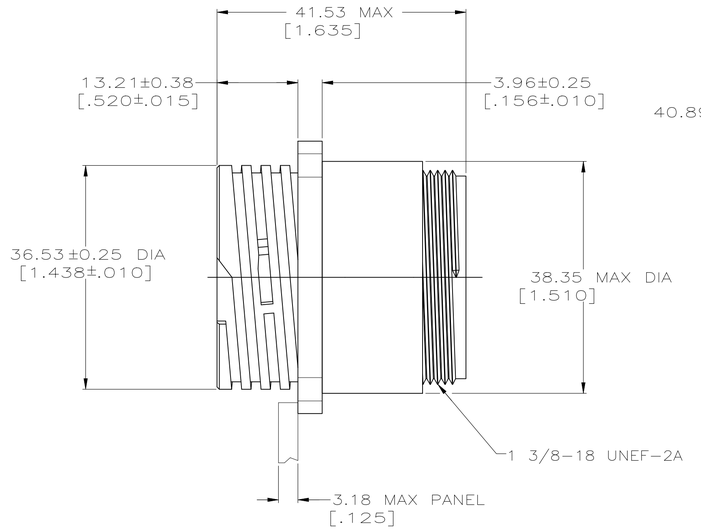

DETAIL A

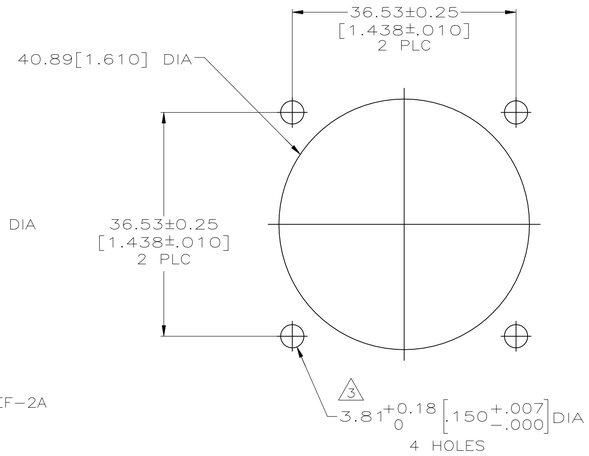

RECOMMENDED PANEL CUTOUT

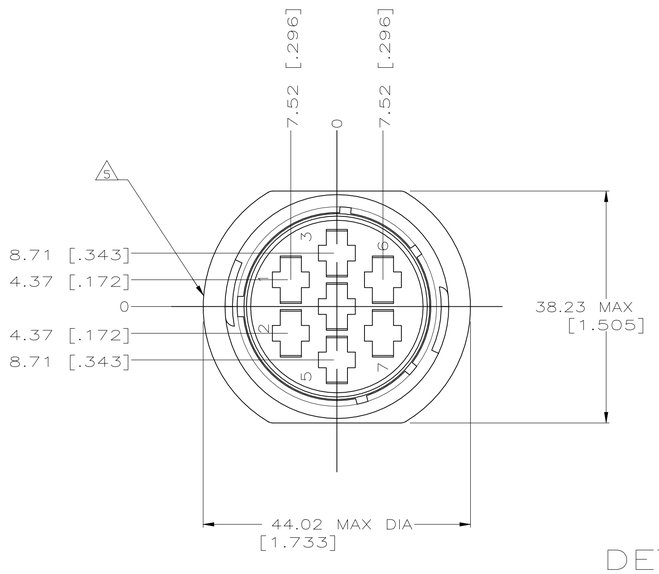

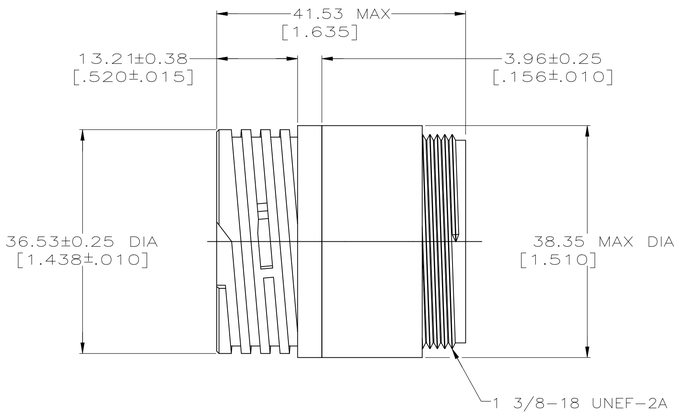

DETAIL B

	4-40 THREADED INSERTS	NO	A	206227-6
4 OBSOLETE	3.81±0.08 [.150±.003]	YES	A	206227-5
	3.81±0.08 [.150±.003]	NO	B	206227-2
	3.81±0.08 [.150±.003]	NO	A	206227-1
C	PERIPHERAL SEAL	SEE DETAIL		PART NUMBER

1. CAVITY IDENTIFICATION ON FRONT AND REAR FACE.
2. WILL ACCEPT SEVEN (7) TYPE XII SOCKET CONTACTS.
3. #4 FASTENER RECOMMENDED FOR MOUNTING.
4. OBSOLETE PARTS: OBSOLETE CIS STREAMLINING PER D.RENAUD/D.SINISI
5. TE LOGO AND PART NUMBER LOCATED ON ANY FLANGE EDGE

THIS DRAWING IS A CONTROLLED DOCUMENT.

DIMENSIONS: mm[INCHES]

TOLERANCES UNLESS OTHERWISE SPECIFIED:
0 PLC ± –
1 PLC ± –
2 PLC ± 0.13 [.005]
3 PLC ± –
4 PLC ± –
ANGLES ± –

MATERIAL: NYLON, BLACK
FINISH: –

DWN D.HARDY 05/31/94
CHK W.G.LENKER 06/08/94
APVD A.FRANTUM 07/13/94
PRODUCT SPEC 108-10024
APPLICATION SPEC –
WEIGHT –

TE Connectivity

NAME: RECEPTACLE HOUSING, REVERSE SEX, SHELL SIZE 23, CPC –

SIZE	CAGE CODE	DRAWING NO	RESTRICTED TO
A1	00779	C-206227	–

CUSTOMER DRAWING | SCALE 2:1 | SHEET 1 OF 1 | REV N

4805 (1/15)