C TJSS-104HC

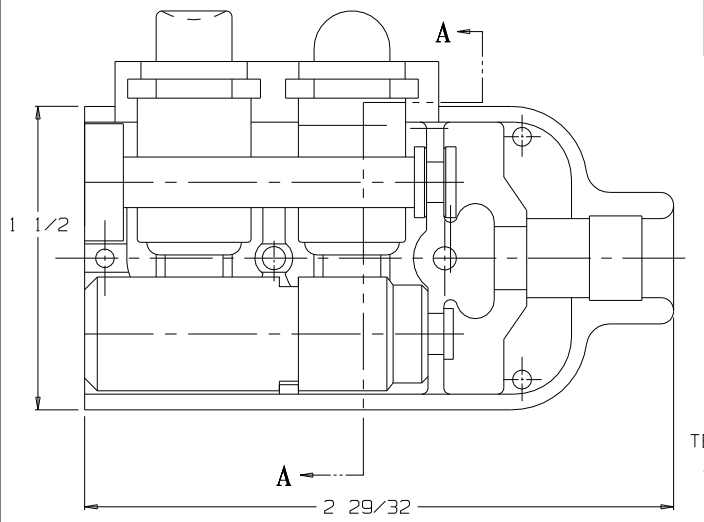


VIEW WITH HALF SHELL REMOVED

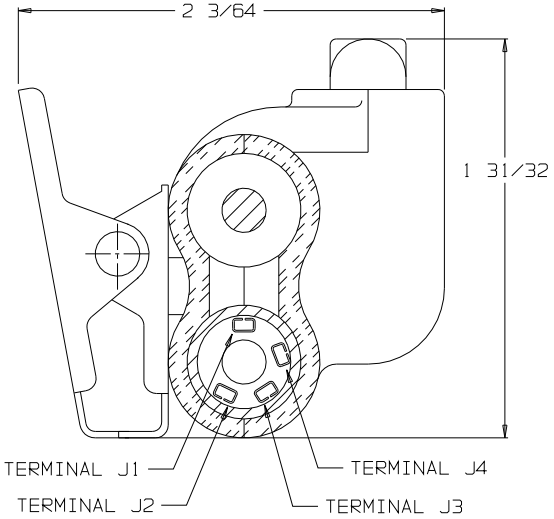


SECTION A-A

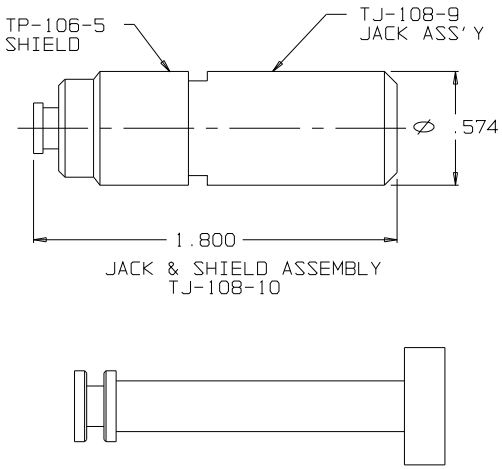


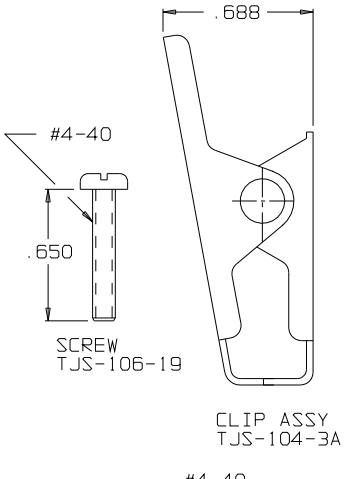


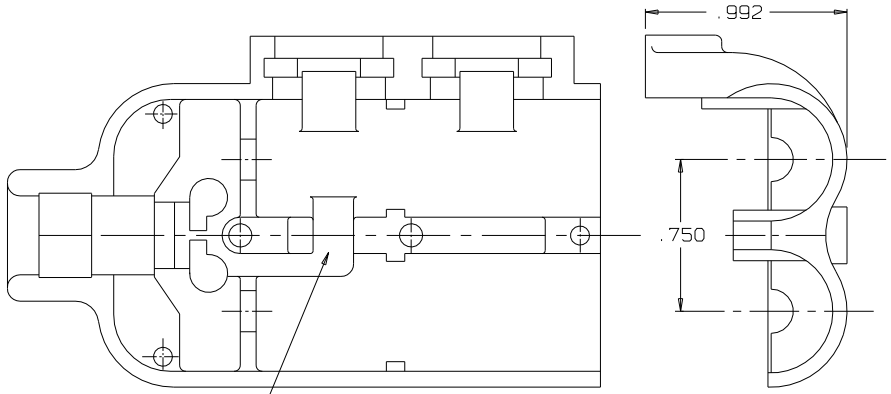


SHELL, HALF TJSS-106-2HC

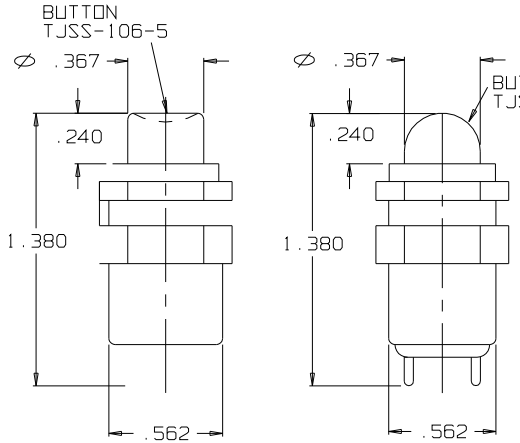


SWITCH
SPNO

SWITCH
SPNO

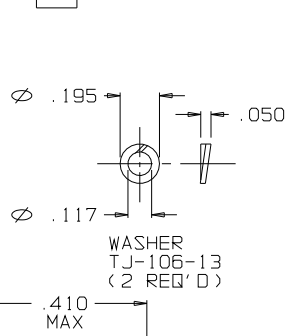


SECTION B-B

STRAIN RELIEF
CLAMP TJSS-106-12
AFTER CRIMPING
USE DANIELS HX4 CRIMP
TOOL AND Y146 DIE SET
SCALE 4:1

A

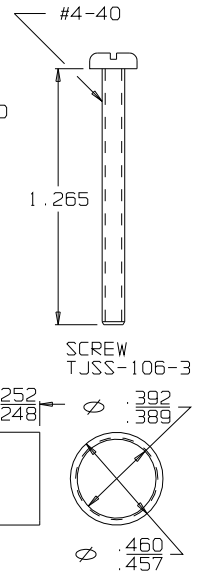


RING, STRAIN RELIEF
TJSS-106-12

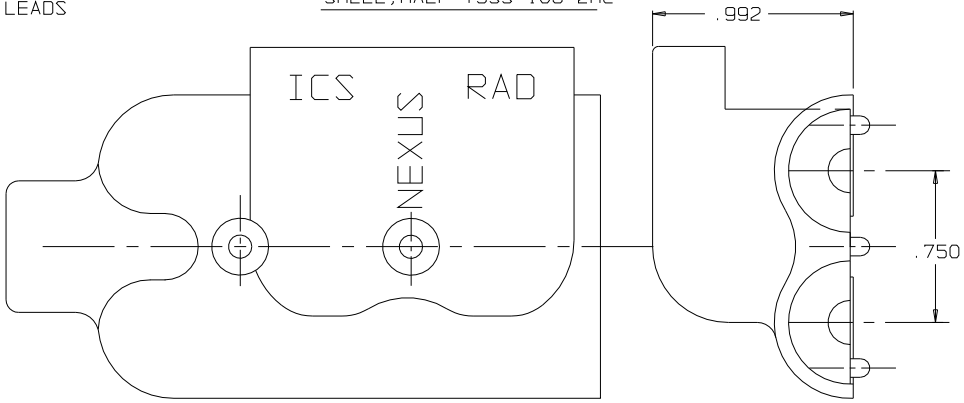


SHELL, HALF TJSS-106-1HC

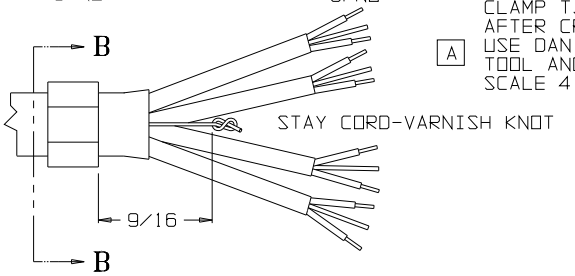


THIS DOCUMENT CONTAINS PROPRIETARY INFORMATION OF NEXUS, INCORPORATED AND SUCH INFORMATION MAY NOT BE DISCLOSED TO OTHERS FOR ANY PURPOSE OR USED FOR ANY PURPOSE WITHOUT THE WRITTEN CONSENT OF NEXUS.

| | | | | | |
|---|---|---|---|---|---|
| A | ADD DANIELS HX4 CRIMP TOOL AND Y146 DIE SET | 026 | 9/18/09 | GPH | |
| LET. | REVISION | CN # | DATE | CHK. | |

| | | | |
|---|---|---|---|
| DWN. BY M.N.F. | DATE 12/14/94 | MATERIAL | |
| CHECKED BY L.SMITH | DATE 4/6/95 | FINISH | |
| APPR. BY L.SMITH | DATE 4/6/95 | WEIGHT | SCALE NONE |
| UNLESS OTHERWISE SPECIFIED DIMENSIONS ARE IN INCHES TOLERANCES ON FRACTIONS DECIMALS ANGLES +/- 1/64 +/-.005 — | | TITLE JACK-TELEPHONE-BIAXIAL SHIELDED (4) CONDUCTOR WITH TWO SWITCHS | |
| | | DO NOT SCALE DWG. | SHEET 1 OF 1 |

NEXUS
STAMFORD, CONN

SIZE C DWG. NO. TJSS-104HC