THIS DRAWING IS UNPUBLISHED.
VERTRAULICHE UNVEROEFFENTLICHTE ZEICHNUNG
© COPYRIGHT — TE Connectivity

RELEASED FOR PUBLICATION:
FREI FUER VEROEFFENTLICHUNG
ALL RIGHTS RESERVED:
ALLE RECHTE VORBEHALTEN.

MATED WITH:
PASSEND ZU:
Bg6

REVISIONS
ABNDERUNGEN

| P | LTR | DESCRIPTION BESCHREIBUNG | DATE | DWN | APVD |
|---|---|---|---|---|---|
| | C2 | REVISED PER ECR-17-014013 | 09FEB2018 | SRG | MKO |

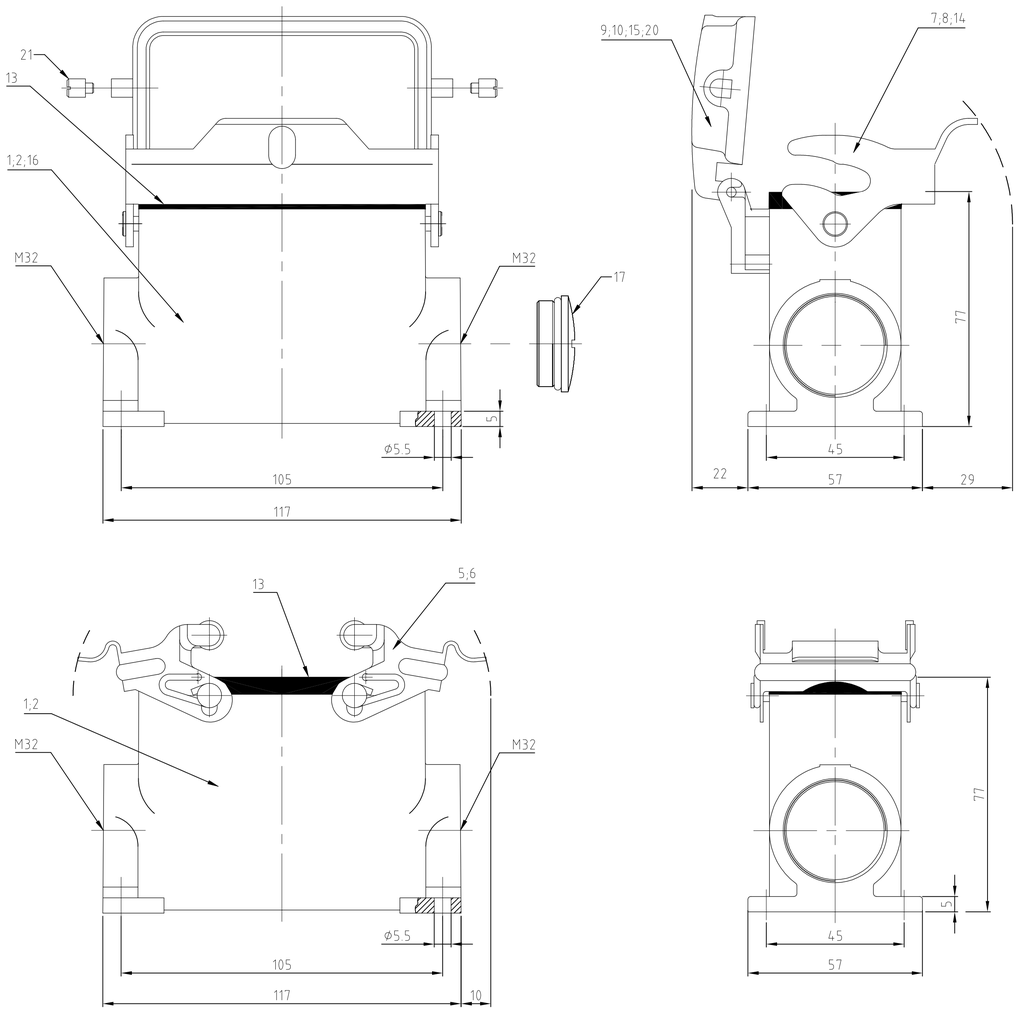


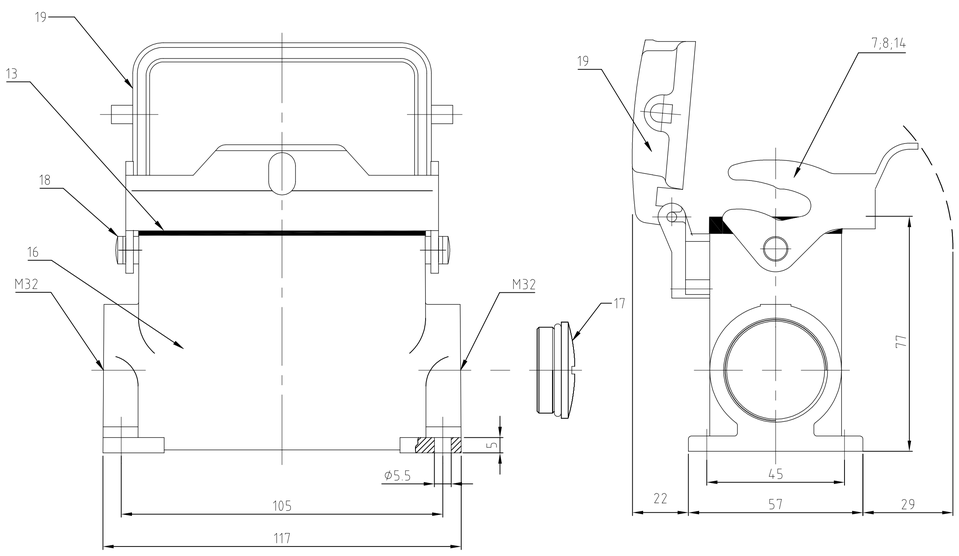


NOTES:

1 Material: Housing: aluminium diecasting alloy
Seals: NEOPRENE

2 SURFACE: VARNISH- GREY
- ALUMINIUM OXID +
VARNISH BLACK

3 PACKAGING:
PACKAGING QUANTITY: 5 PIECES

4 SPECIAL PACKAGING: Krauss-Maffei
PACKAGING UNIT: 55 PIECES IN Krauss-Maffei-Box

5 VARNISH ON THE INSIDE NOT NECESARILY

| 1-4 | 1-3 | 1-2 | 1-1 | 0-9 | 1-0 | 0-6 | 0-2 | 0-7 | 0-3 | 0-8 | 0-4 | 0-5 | 0-1 | DESCRIPTION | MATERIAL | SURFACE | COLOR | ITEM No. | |
|---|---|---|---|---|---|---|---|---|---|---|---|---|---|---|---|---|---|---|---|
| OBSOLETE | | | OBSOLETE | OBSOLETE | OBSOLETE | | OBSOLETE | OBSOLETE | OBSOLETE | | | OBSOLETE | OBSOLETE | | | | | | |
| | | | | | | 2 | | | | | | | | clip bolt | stainless steel | | | 21 | |
| | | | | | | 1 | | | | | | | | cover | aluminium/ALU | aluminium oxid | black | 20 | |
| 1 | | | | | | | | | | | | | | cover | aluminium/ALU | | grey | 19 | Neutral |
| 2 | | | | | | | | | | | | | | clip bolt | steel | zink plated | blue | 18 | M5 |
| 1 | 1 | | | | | | | | | | | | | Blanking Piece with Seal | steel | | blue | 17 | M32 |
| 1 | 1 | | | | | | | | | | | | | Surface mounted housing side entry | aluminium/ALU | | grau | 16 | Neutral |
| | | | 1 | | | | | | | | | | | cover | aluminium/ALU | | red | 15 | |
| | | | 1 | | | | | | | | | | | Surface mounted housing side entry | aluminium/ALU | | red | 14 | |
| 1 | 1 | 1 | 1 | 1 | 1 | 1 | 1 | 1 | 1 | 1 | 1 | 1 | 1 | profile seal | Neoprene | | black | 13 | |
| | | | | 2 | | | | | | | | | | central clip bolt | stainless steel | blank | | 12 | |
| | | | | | 2 | | | | | | | | | central clip bolt | steel | zink plated | blau/blue | 11 | |
| | | | | | | 1 | | | | | | 1 | | cover | aluminium/ALU | aluminium oxid | black | 10 | |
| | | | | | | | 1 | | | | | | 1 | cover | aluminium/ALU | | grey | 9 | |
| | | | | | | | | 1 | | | | | | side clip | stainless steel | blank | | 8 | |
| 1 | 1 | | 1 | | | | 1 | | 1 | | | | | side clip | steel | zink plated | blue | 7 | |
| | | | | | | | | | | 2 | | | | locking clip | stainless steel | blank | | 6 | |
| | | 2 | | | | | | | | | 2 | | | locking clip | steel | zink plated | blue | 5 | |
| | | | | | | | | | | | | 4 | | clip bolt | stainless steel | blank | | 4 | |
| | | | | | | | | | | | | | 4 | clip bolt | steel | zink plated | blue | 3 | |
| | | | | 1 | | 1 | | 1 | | 1 | | 1 | | Surface mounted housing side entry | aluminium/ALU | aluminium oxid | black | 2 | |
| | | 1 | | | 1 | | 1 | | 1 | | 1 | | 1 | Surface mounted housing side entry | aluminium/ALU | | grey | 1 | |
| 3 | 3 | 4 | 3 | 3 | 3 | 3 | 3 | 3 | 3 | 3 | 3 | 3 | 3 | | | | | | |
| HD.40.SGD-LB.2.M32.Z-BS. | HD.40.SG-LB.2.M32.Z-BS | HD.40.SG-VS.2.M32.Z.KM | HD.40.SGD-LB.2.M32.Z | HD-K.Z.40.SG-ZVGR.2.M32.Z | HD-Z.40.SG-ZVGR.2.M32.Z | HD-K.40.SGD-LB.2.M32.Z | HD.40.SGD-LB.2.M32.Z | HD-K.40.SG-LB.2.M32.Z | HD.40.SG-LB.2.M32.Z | HD-K.40.SG-VS.2.M32.Z | HD.40.SG-VS.2.M32.Z | HD-K.40.SGD.2.M32.Z | HD.40.SGD.2.M32.Z | DESCRIPTION | | | | | |

THIS DRAWING IS A CONTROLLED DOCUMENT.
DIESE ZEICHNUNG IST EIN KONTROLLIERTES DOKUMENT.

DIMENSIONS: MASSEINHEITEN mm

TOLERANCES UNLESS OTHERWISE SPECIFIED: ALLGEMEINTOLERANZEN
0 PLC ± -
1 PLC ± -
2 PLC ± -
3 PLC ± -
4 PLC ± -
ANGLES / WINKEL ± -

MATERIAL –

FINISH / OBERFLAECHE / FARBE –

DWN Schneider 04.06.02
CHK Schweiger 04.06.02
APVD –
PRODUCT SPEC PRODUKTSPEZ. –
APPLICATION SPEC VERARBEITUNGSSPEZ. –
WEIGHT GEWICHT –

TE Connectivity Ltd.

NAME
Surface mounted housing side entry
Sockelgehaeuse HD.40.SG/SGD.2.M32.Z
–

| SIZE | CAGE CODE | DRAWING NO ZEICHNUNGS-NR. | RESTRICTED TO NUR FUER |
|---|---|---|---|
| A1 | 00779 | C-1106451 | – |

CUSTOMER DRAWING / KUNDENZEICHNUNG

| SCALE MASSSTAB | SHEET BLATT | OF VON | REV |
|---|---|---|---|
| 1:1 | 1 | 1 | C2 |