THIS DRAWING IS UNPUBLISHED. RELEASED FOR PUBLICATION 20
© COPYRIGHT 20 BY - ALL RIGHTS RESERVED.

REVISIONS

P	LTR	DESCRIPTION	DATE	DWN	APVD
	B1	NEW PN FOR 9 AND 10 POS. ADDED	27JAN2015	PS	JK

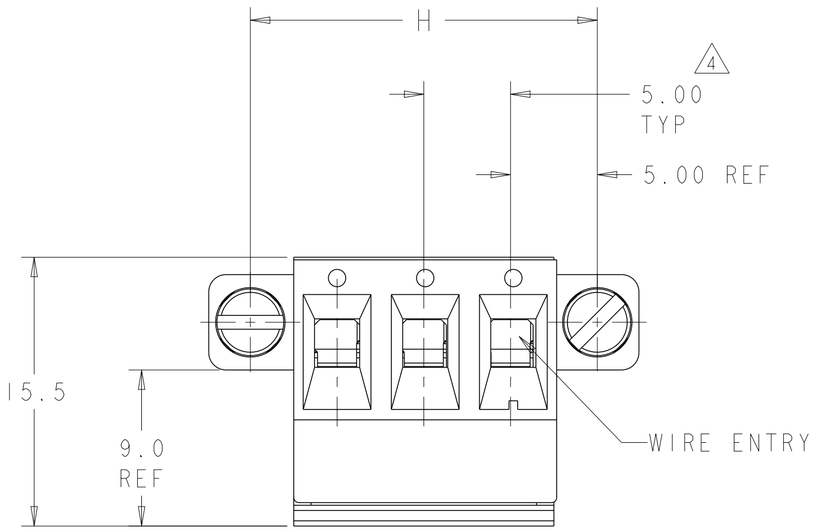

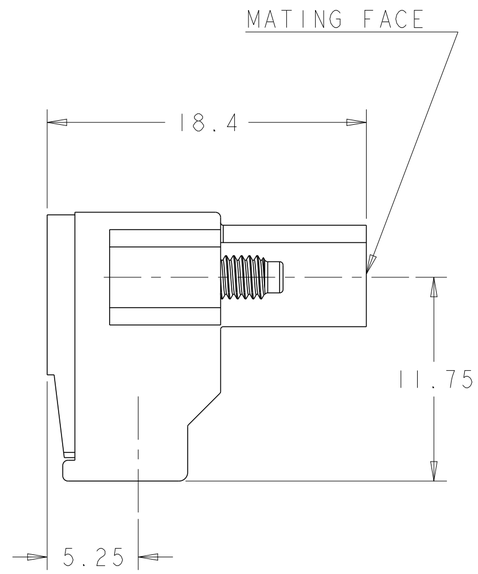

NOTES:

1. MATERIALS & FINISH
   HOUSING : PA6.6 , UL94 V0, COLOR -GREEN
   SCREW M3 : BRASS, NICKEL PLATED
   CLAMP : BRASS, NICKEL PLATED
   CONTACT : PHOSPHOR BRONZE , TIN PLATED

2. RECOGNIZED UNDER THE COMPONENT PROGRAM OF UNDERWRITERS LABORATORIES INC. FILE No. E60677.

3. IMQ CERTIFICATE WITH SURVEILLANCE ON CONFORMITY WITH IEC 998-1/998-2-1.

4. NOT CUMULATIVE TOLERANCE.

5. MECHANICAL
   INSERTION FORCE PER POLE : MAX 3N
   WITHDRAWAL FORCE PER POLE : MIN 1.5 N
   RECOMMENDED/ HIGHEST TIGHTENING TORQUE:0.5/0.6 Nm
   WIRE STRIPPING LENGTH: 6.0 TO 7.5mm

6. ELECTRICAL
   WIRE RANGE : 30 - 12 AWG
   MAX. VOLTAGE : 300 V
   MAX CURRENT : 15 A
   CONTACT RESISTANCE : <15 m Ohm
   INSULATION RESISTANCE : > 1000 M Ohm (500V DC)

7. OPERATING TEMPERATURE RANGE: -40°C TO +110°C

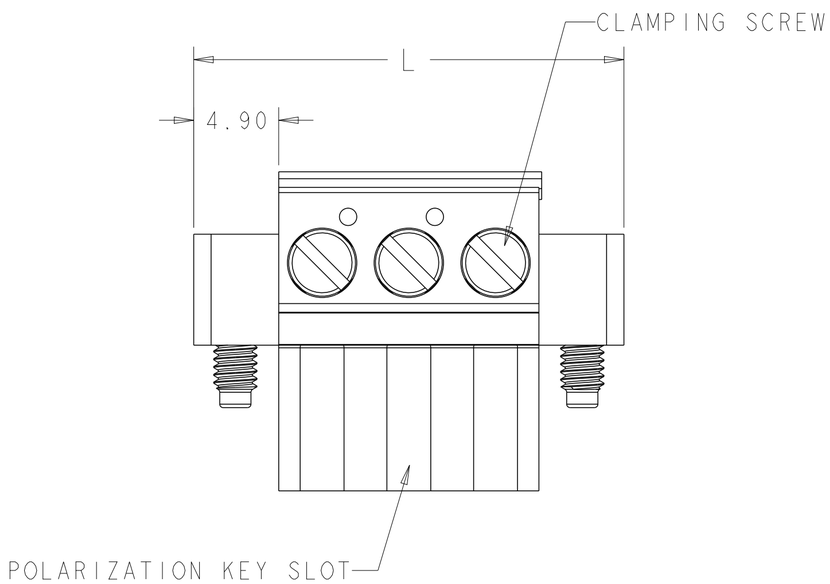

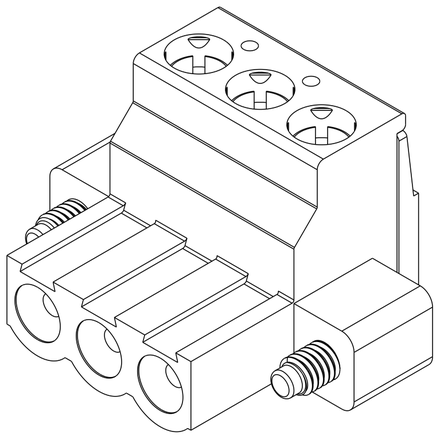

L	H	NO. OF POSN	PART NUMBER
59.8	55.0	10	1-796858-0
54.8	50.0	9	796858-9
49.8	45.0	8	796858-8
44.8	40.0	7	796858-7
39.8	35.0	6	796858-6
34.8	30.0	5	796858-5
29.8	25.0	4	796858-4
24.8	20.0	3	796858-3
19.8	15.0	2	796858-2

THIS DRAWING IS A CONTROLLED DOCUMENT.

DIMENSIONS: mm

TOLERANCES UNLESS OTHERWISE SPECIFIED:
0 PLC ±-
1 PLC ±0.2
2 PLC ±0.15
3 PLC ±
4 PLC ±
ANGLES ±2°

MATERIAL 1
FINISH 1

DWN S.WELDON 12FEB2001
CHK D.BIEVENOUR 12FEB2001
APVD D.BIEVENOUR 12FEB2001
PRODUCT SPEC -
APPLICATION SPEC -
WEIGHT -

TE Connectivity

NAME TERMINAL BLOCK, PLUG, 90 DEG, WITH SCREW LOCKING FLANGE 5.00mm PITCH

SIZE A2 | CAGE CODE 00779 | DRAWING NO C-796858 | RESTRICTED TO -

Customer Drawing | SCALE 4:1 | SHEET 1 OF 1 | REV B1

1471-9 (3/13)