THIS DRAWING IS UNPUBLISHED. RELEASED FOR PUBLICATION – ,N/A .
© COPYRIGHT N/A By – ALL RIGHTS RESERVED.

| LOC | DIST |
|---|---|
| — | — |

REVISIONS

| P | LTR | DESCRIPTION | DATE | DWN | APVD |
|---|---|---|---|---|---|
| | R | REV PER ECO-15-016062 | 10NOV15 | KG | CD |

1. THIS RCPT. IS DESIGNED TO CONFORM TO THE LATEST ISSUE OF MIL-C-24308.
2. MAX WIRE INSUL TO BE USED WITH THIS RCPT IS .068 DIA.
3. STAINLESS STEEL RETENTION CLIPS ARE INCLUDED IN INSERTS.
4. THIS RCPT. WILL ACCEPT SIZE 20 SOCKET CONTACT M39029/63-368 OR ANY TYCO HD-20 SOCKET CONTACT. CONTACTS ORDERED SEPARATELY.

5. MFG'S PART NO. MARKED ON CONNECTOR REPRESENTS KIT NUMBER WITH CONTACTS.
6. UL/CSA DESIGNATION STAMPED IN THIS AREA, OPTIONAL.
7. RESTRICTED ITAR ASSEMBLY.
8. CADMIUM PER QQ-P-416.
9. BRIGHT TIN PER ASTM-B-545 .000400-.000550 THK OVER COPPER PER AMS2418 .000050 MIN THK.

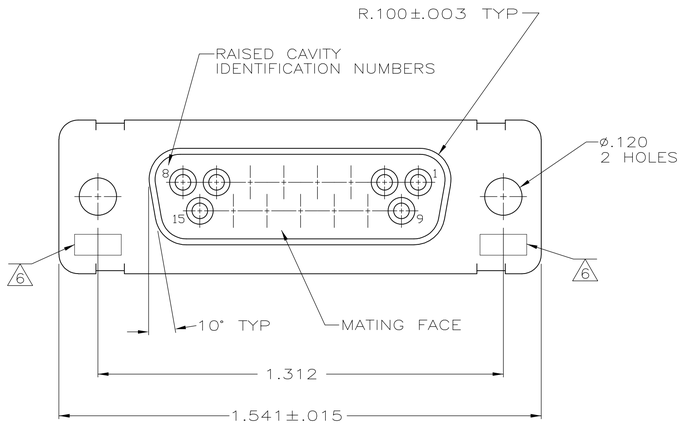


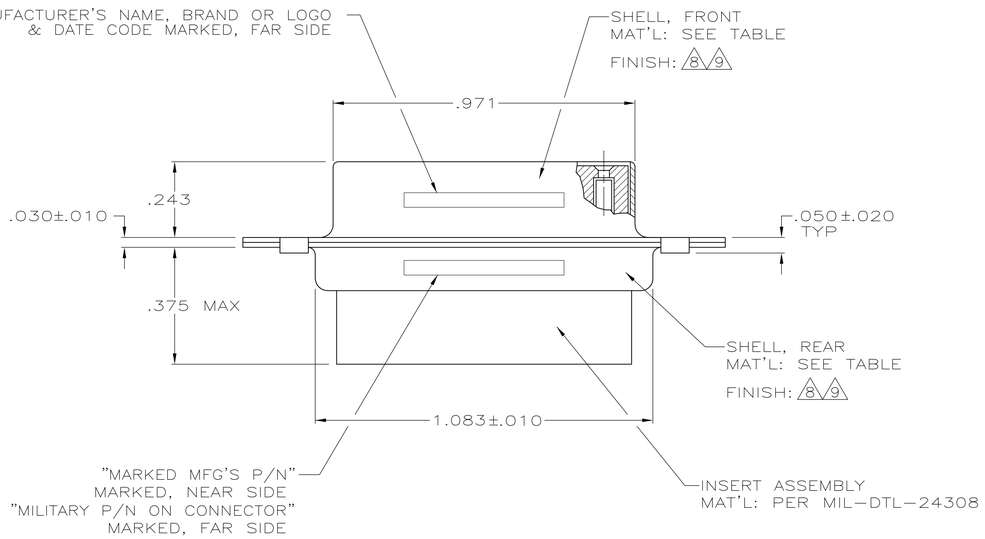


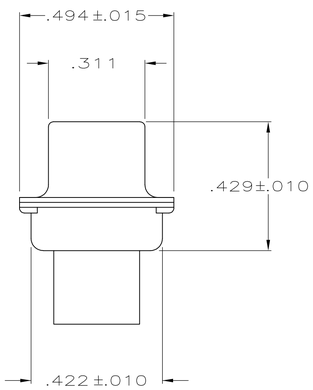


| | MFG'S P/N MARKED ON CONNECTOR | MILITARY P/N ON PACKAGE | MILITARY P/N ON CONNECTOR | REMARKS | SHELL FINISH | SHELL MAT'L | PART NO. |
|---|---|---|---|---|---|---|---|
| | 205163-5 | – | – | – | 9 | STEEL PER ASTM-A-109 | 205163-5 |
| | – | – | – | 7 | – | – | 205163-4 |
| SUPSD BY 205187-1 | – | – | – | – | – | STEEL PER ASTM-A-109 | 205163-3 |
| SUPSD BY 206799-2 | – | – | – | – | – | BRASS | 205163-2 |
| | 205557-2 | M24308/2-282F | M24308/2-2F | 5 | 8 | STEEL PER ASTM-A-109 | 205163-1 |

THIS DRAWING IS A CONTROLLED DOCUMENT.

DIMENSIONS: INCHES

TOLERANCES UNLESS OTHERWISE SPECIFIED:
0 PLC ± –
1 PLC ± –
2 PLC ± –
3 PLC ± .005
4 PLC ± –
ANGLES ± 0°30'

MATERIAL: SEE CALLOUTS
FINISH: SEE CALLOUTS

DWN C.C.THOMAS 12-DEC-87
CHK F.C.BALLEW 10-DEC-87
APVD F.C.BALLEW 10-DEC-87
PRODUCT SPEC —
APPLICATION SPEC —
WEIGHT —

TE Connectivity

NAME: AMPLIMITE RCPT FOR SOCKET CONTACTS HI-DENSITY HD-20 CONNECTOR SIZE 2 (15 POSN) SERIES 109

| SIZE | CAGE CODE | DRAWING NO | RESTRICTED TO |
|---|---|---|---|
| A1 | 00779 | C-205163 | — |

CUSTOMER DRAWING | SCALE 4:1 | SHEET 1 OF 1 | REV R

4805 (3/11)