THIS DRAWING IS UNPUBLIDHED. RELEASED FOR PUBLICATION ,1997 .
© COPYRIGHT 1997 BY AMP INCORPORATED. ALL RIGHTS RESERVED.

LOC	DIST
DS	

REVISIONS

P	LTR	DESCRIPTION	DATE	DWN	APVD
	O	RELEASED ECN(RD97-056)	11,MAR,'97	JW	JK
	A	REVISED ECN(RD97-067)	25,MAR,'97	JW	JK
	B	REVISED ECN(FC00-0069-01)	23,JUN,'01	JW	CS
	C	REVISED ECN(FC00-0124-01)	12,NOV,'01	JW	CS

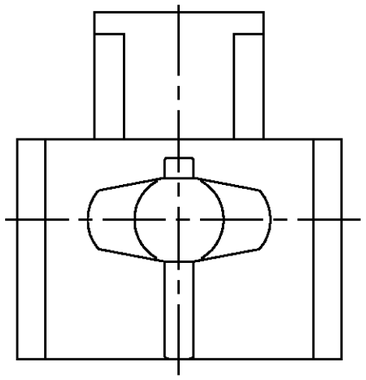

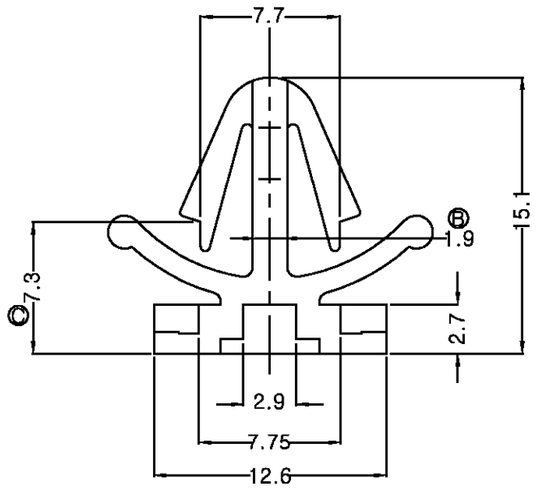

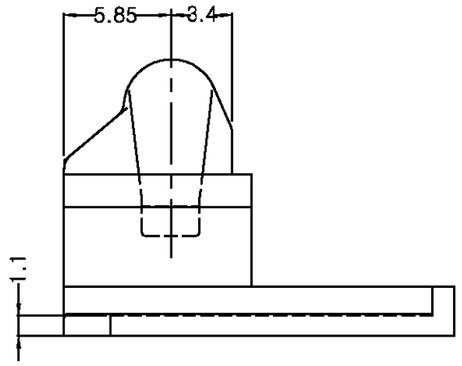

PANEL HOLE SIZE

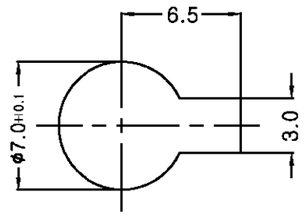

PANEL THICKNESS : 0.7-1.6mm

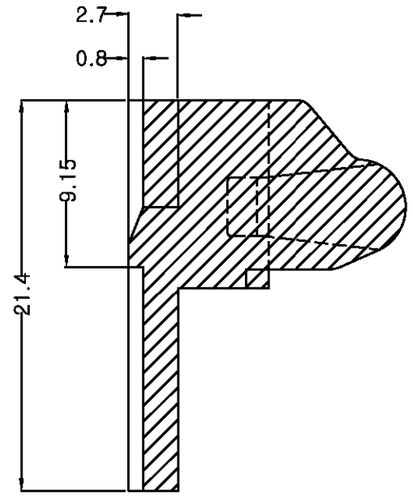

SECTION A-A

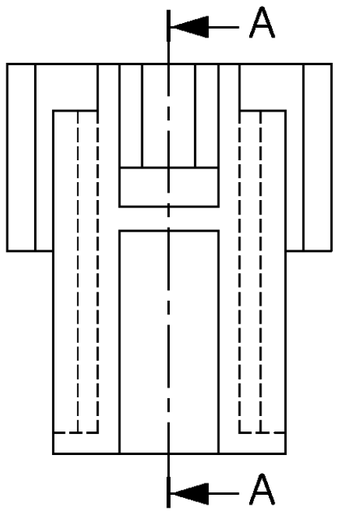

NOTE.
1△MATERIAL : NYLON66
2△COLOR

Ⓐ NATURAL	368165-2
BLACK	368165-1
COLOR	PART NO.

THIS DRAWING IS CONTROLLED DOCUMENT FOR AMP INCORPORATED. IT IS SUBJECT TO CHANGE AND THE CONTROLLING ENGINEERING ORGANIZATION SHOULD BE CONTACTED FOR THE LATEST REVISION.

DIMENSIONS: MM

3rd ANGLE PROJECTION

TOLERANCES UNLESS OTHERWISE SPECIFIED:
0 <XX<10 ± 0.2
10<XX<30 ± 0.25
30<XX ± 0.3
ANGLES ± 3°

MATERIAL: SEE NOTE

FINISH: SEE TABLE

DWN JW JUNG
CHK BM JANG
APVD CS LEE
PRODUCT SPEC ---
APPLICATION SPEC ---
WEIGHT ---

AMP — AMP KOREA, kyungsan, korea

NAME: CLIP HSG FOR 070 & EJ (ø7 PANEL)

SIZE	CAGE CODE	DRAWNING NO
A3	00779	C- 368165

SCALE 3 : 1 | SHEET 1 OF1 | REV C

AMP 1470-19 REV 09MAY94