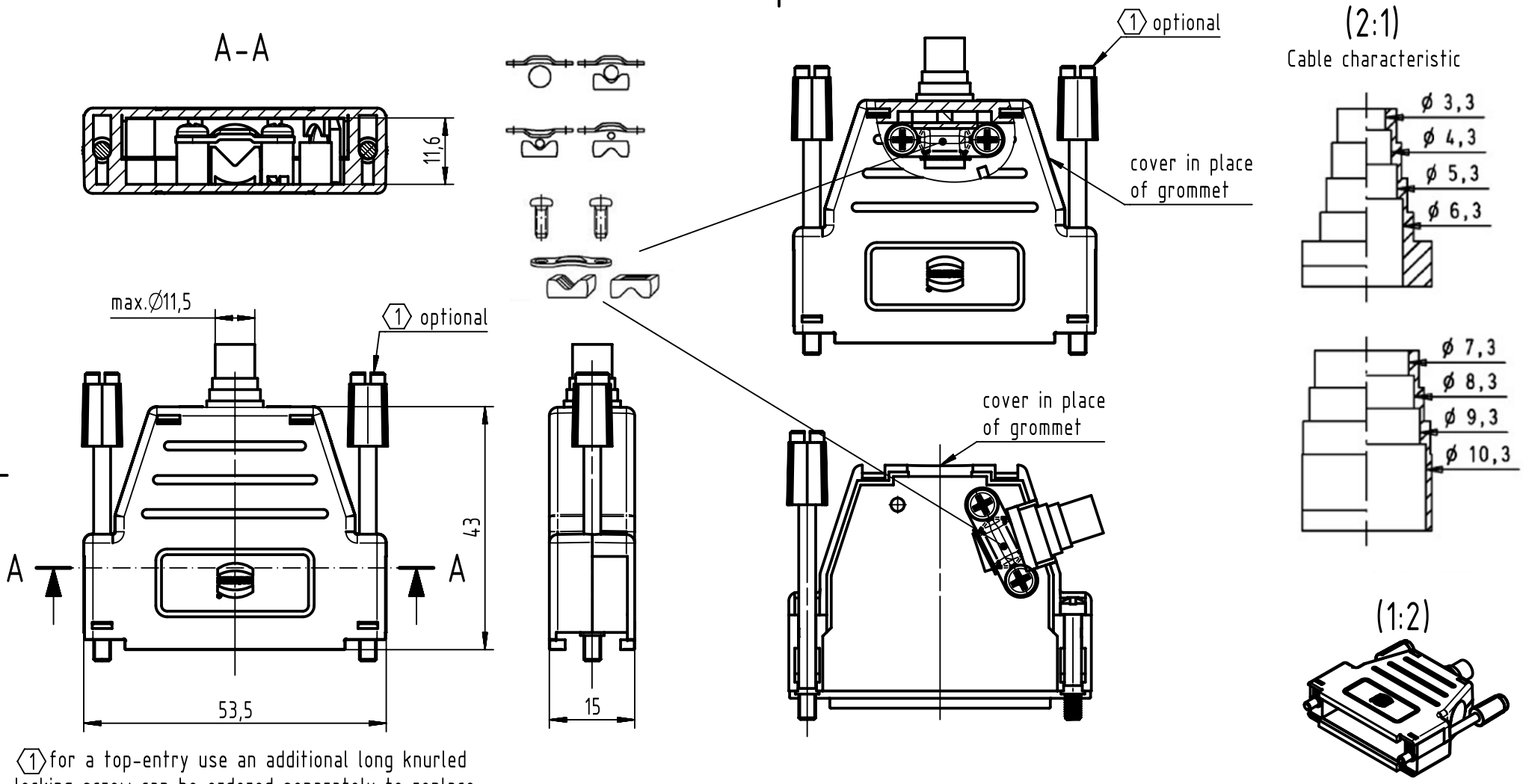

1 for a top-entry use an additional long knurled locking screw can be ordered separately to replace the short locking screw.

09670250435	4-40 UNC	metallized
09670250431	M3	metallized
09670250434	4-40 UNC	black
09670250430	M3	black
Part number	Screw	Color

All Dimensions in mm
Original Size DIN A4

Scale 1:1

Free size tol.

Ref.

Sub.

All rights reserved

Department EC PD - CN

HARTING Electronics GmbH

D-32339 Espelkamp

Created by	Inspected by	Standardisation	Date	State
ZHUANGJ	LUOK	HOFFMANN	2015-09-14	Final Release

Title D-Sub hood 25-pole top & side entry

Doc-Key / ECM-Nr. 100592124/UGD/000/C 500000094091

Type TB

Number 0967025043X

Rev. C

Page 1/1

A4